# SCRR + RCA Series

## Computer Room Air Condtioner (CRAC)

اجهـــزة تكـييـف هـــواء
AIR CONDITIONING EQUIPMENT



60/50 Hz

R-410A
REFRIGERANT

Chilled
WATER

Range 5TR to 30TR
(17 kW to 105 kW)

GCC PRODUCT
منتج خليجي
Since 1974



Made in UAE صنع في الإمارات

## Contents


Introduction.....02
Legend.....02
Nomenclature.....02
Component Features.....03
Optional Features.....06
Unit Specifications .....09-13
Capacity Ratings.....14-17
Electrical Data.....20-21
Typical Wiring Diagram .....22-28
Dimensional Data .....29-31
Loading Points .....33-34
Recommended Clearances .....37
Unit Configuration..... ....38
Installation and Commissioning....39
Unit Handling .....40
Guide Specifications.....41-42


## Legend

The following legends are used throughout this manual:

| | | | |
|---|---|---|---|
| cfm | Cubic feet per minute | PI | Power Input of Compressor |
| Hz | Hertz | TR | Tons of Refrigeration |
| kW | Kilowatts | V | Volts |
| kg | Kilogram | Pa | Pascal |
| lbs | Pounds | EWB | Evaporator Wet Bulb air entering temperature |
| l/s | Liters per second | | |
| MBh | BTUH x 1000 | | |
| Ph | Phase | BPF | By Pass Factor |
| RPM | Revolutions per minute | EER | Energy Efficiency Ratio |
| in. wg | Inch water gauge | AFR | Air Flow Rate |

## Nomenclature

**S C R R - 5 1 017 U Y**

- Power Supply code
  R: 380V-400/3Ph/60Hz
  Y: 380V-415/3Ph/50Hz
- U : Up Flow - Down Return
  F : Up Flow - Front Return
  D : Down Flow
- Nominal Capacity in kW
- 1. Single Circuit 2. Double Circuit
- Frequency
  5: 50Hz 6: 60Hz
- R:R-410A W:Chilled Water
- Computer Room
- SKM

**R C A - 5 1 022 Y**

- Power Supply code
  R: 380V-400/3Ph/60Hz
  Y: 380V-415/3Ph/50Hz
- Nominal Capacity in kW
- 1. Single Circuit 2. Double Circuit
- Frequency
  5: 50Hz 6: 60Hz
- Air-Cooled
- Remote Condesner

***SKM reserves the right to change, in part or in whole the specifications of its Air Conditioning Equipment at any time in order to add the latest technology. Therefore, the enclosed information may change without any prior notice.***

## Introduction

SKM Computer Room Series (**CRAC**) is designed and manufactured to meet the requirements of precision cooling and to work under Gulf's severe climatic conditions.

By precisely regulating the temperature and humidity, **SKM CRAC** series guarantee optimum ambient conditions for your data centers and IT equipment. SKM offers the series in both option of Direct Expansion and Chilled water to satisfy the market requirement and provide the best solution for SKM customers. They are designed for different air flow configuration, down flow or up flow (front or down return).

**SCRR+RCA** :
Direct Expansion type; It's a combination of indoor unit (**SCRR**) and outdoor unit (**RCA**).
**SCRW** :
Chilled Water type .

**SCRR+RCA** units (hermetic scroll) are available in 12 models covering nominal capacity ranges from 5 TR – 23 TR in 60Hz and 5 TR – 21 TR in 50Hz, it's performance rated in accordance to AHRI1360 and exceeds SASO2874 standard requirement.

**SCRW** units supplied by SKM are ready to be connected with source of chilled water like chiller. **SCRW** units are available in 10 models covering nominal capacity ranges from 5 TR – 30 TR in both 50 & 60 Hz.

**SKM CRAC** series adopt in-room precision air conditioner for data center and IT cooling system, this series with advantages of reliability, rigid structure, high performance, advanced controller and precise temperature control , fully satisfies the cooling and humidity requirements of data center.

**SKM CRAC** units are internally wired and all that is required to be done on site are ducting, if required refrigerant piping, power wiring for **RCA** fans from **SCRR**, and power supply connection which reduces installation work and consequently keeps costs to a minimum.

In other hand for **SCRW**, all that is required to be done on site are ducting (if required), Chilled Water piping, and power supply connection. SKM provides qualified service and stocks of replacement parts in all major cities of G.C.C countries, Egypt, Jordan and Pakistan. See back cover for details.

SKM Air Conditioning L.L.C

# General Features

## SCRR + RCA

The **SCRR+RCA** Series Computer Room Air Conditioners Direct Expansion type are yet another new unique series from SKM incorporates many salient features which, together, provides a heavy duty, robust, long lasting commercial unit meant for high end data center applications. The **SCRR+RCA** series models combine high efficiency condenser and cooling coil, plug evaporator fan, advanced controller, humidifer, and heater in addition to premium safety and operational controls.

**SCRR+RCA** units provide an extremely rugged, long life, energy efficient, and precise control air conditioner that will provide cooling with higher efficiency over a long and extended period of time.

What makes **SCRR+RCA** series yet another model in the top class range of SKM products is the use of:

- High efficiency totally sealed scroll hermetic compressor.
- High Efficiency evaporator EC plug fan.
- Totally enclosed , class F insulated , condenser fan motor.
- Heavy duty condenser and evaporator coils optimized and designed for a long life maintenance free operation.
- Cabinet construction specifically for gulf climate condition.
- Advanced controller for the unit operation.
- High efficiency steam humidifier.
- Electric heater (stepless control).
- Typically, much heavier gauge tubing and thicker fins for ruggedness and long life.
- Electronic expansion valve for precise control.
- Speed regulator on condenser fan for low ambient operation.

# Main Component Features

## Remote Condenser Unit

### Condenser Coils

Condenser coils are manufactured from corrugated fin and Hi-X inner grooved seamless copper tubes mechanically bonded to aluminium fins to ensure optimum heat transfer. All coils are tested against leakage by high air pressure under water 715psig(4930kPa). An integral subcooling circuit is incorporated in the lower section of the condenser to increase system capacity. The additional condenser surface provides more cooling using less energy at no additional cost.

### Condenser Fans

Condenser fans are propeller type with aluminum alloy blades and are directly driven by electric motors. Motors are Totally Enclosed Air Over (TEAO), six poles with Class F insulation and IP54 protection. The TEAO and Class F insulation features ensure long life and are unique to SKM. Condenser fan is provided with speed regulation to ensure smooth operation of the unit at low ambient condition.

### Casing and Structure

The unit casing used in RCA series is made of hot dip galvanized (zinc coated) steel sheets, conforming to JIS-G 3302 and ASTM A653, which is phosphatized and baked after an electrostatic powder coat of approx. 60 microns. This finish and coating can pass a 1000 hour in 5% salt spray testing at 95°F (35°C) and 95% relative humidity as per ASTM B117.

## Computer Room Air Conditioner

### Compressors

Compressors used in the **SCRR** units are hermetically sealed, hi-efficiency, low noise, and compact scroll with the following features:

- High Efficiency.
- Quiet operation, Low Sound levels.
- Compact and light.
- Limited wear.
- 70% fewer moving parts than comparably sized reciprocating compressors.
- Unique ability to handle liquid refrigerant.
- Suction gas motor cooling.
- Suction screen.
- Centrifugal oil pumps with filter and magnet.
- Brazed fittings or Rotalock options.
- No internal valves.

### Evaporator Coils

All evaporator coils are made of inner grooved copper tubes mechanically bonded into corrugated aluminum fins to ensure optimum heat transfer. Coils conform to AHRI-410. All evaporator coils are tested against leakage by 450psig (3100kPa) high pressure under water. Each evaporator coil is supplied with a factory sized and matched electronic expansion valves and 4 mounting holes for ceiling suspension.

### Evaporator Fan & Drive

The fan is high efficient plug type , direct driven by EC motor with up to 33% greater efficiency than standard motor, to provide the optimal fan performance. Advantages of EC motors over conventional AC motors are:

- High efficiency.
- Integrated controller.
- Simple connections.
- Quite operation.
- Eco friendly and suitable for green building concept

## Filter Section

**SCRR** series are supplied with 2" thick pleated type filters with grade G4 as standard for all models. Filter mounted on the evaporator coil for reduced airside pressure drop.

## Casing and Structure

The unit casing for **SCRR** is made of zinc coated galvanized steel sheets conforming to JIS-G3302 and ASTM A653 which is phosphatized and baked after an electrostatic powder coat of approximately 60 microns. This finish and coating can pass a 1000 hour in 5% salt spray testing at 95°F (35°C) and 95% relative humidity as per ASTM B117. Panels and casing are insulated with 1" (25mm) thick fiberglass (with BGT coating) thermal and acoustic insulation having density of 2 lb/ft³. (32 kg/m³) and thermal conductivity of 0.23 BTU.in/ft²°Fh (0.033 W/m°K). Insulation meets the requirements of NFPA 90A and 90B for fire resistance. Raised floor stand as option available.

## Steam Humidifier

The steam humidifier is of the immersed electrode type and is based on the most advanced microprocessor technology. It is complete with cleanable cylinder, fill and drain valves, stainless steel distributor and electronic control.

Refer next table for the Humidifier Capacity based on the models.

| SCRR | Humidifier (kg/hr) |
|---|---|
| 51017 / 61018 | 5 |
| 51020 / 61020 | 5 |
| 51024 / 61025 | 5 |
| 51030 / 61030 | 5 |
| 51036 / 61037 | 8 |
| 51042 / 61042 | 8 |
| 52036 / 62037 | 8 |
| 52042 / 62042 | 8 |
| 52048 / 62052 | 10 |
| 52063 / 62064 | 10 |
| 52070 / 62073 | 15 |
| 52075 / 62080 | 15 |

**Table 1**

## Liquid Receiver

Liquid receiver provided in the liquid line with rotolock valves on both inlet and outlet.

## Expansion Valve

SKM **SCRR** use electronic expansion valve for precise control of refrigerant mass flow. Our electronic expansion valve improves EER (Energy Efficiency Ratio) at full & part-load conditions. Also it improves temperature control & increases the range of operating conditions.

## Liquid Line Sight Glass

For monitoring refrigerant charge and to provide visual indication of moisture presence in the system.

## Liquid and Discharge Shut Off Valve

To isolate indoor and outdoor unit, for maintenance purposes.

## Electric Heater

Electric heating batteries are made up of finned heating elements, constructed from high quality 80/20 nickel chrome resistance wire centred in metal tube by compressed magnesium oxide. Helical fins are tightly wound around the tubular heating element. These heaters are provided with circuit breaker, contactor, thyristor and thermal safety cutouts. Thyristor control provides precise control of the heater to achieve an accurate temperature and humidity control.

Refer next table for the electric heater kilowatts based on the models.

| SCRR | HEATER (KW) |
|---|---|
| 51017 / 61018 | 6 |
| 51020 / 61020 | 6 |
| 51024 / 61025 | 6 |
| 51030 / 61030 | 6 |
| 51036 / 61037 | 7.5 |
| 52036 / 62037 | 7.5 |
| 51042 / 61042 | 7.5 |
| 52042 / 62042 | 7.5 |
| 52048 / 62052 | 10.5 |
| 52063 / 62064 | 10.5 |
| 52070 / 62073 | 15 |
| 52075 / 62080 | 15 |

**Table 2**

## Stainless Steel Drain Pan

Stainless steel drain pan(Grade 304). Insulation under drain pan as per SKM standard.

## Control Panel

Unit-mounted control panel is fabricated out of heavy gauge sheet steel in phosphatized powder coated baked finish. A hinged access door and lockable handle is provided for easy access and security, for the unit and the control panel. The panel is factory wired in accordance with NEC 430 & 440, labelled, tagged and features 220-230V controls. Below are the standard components provided in any **SCRR** control panel.

- Isolator on the main incomer with external door handle.
- Individual contactors for compressors, condenser fan motors, electric heater and humidifier. Supply fan individual starter.
- Individual circuit breakers for compressors, condenser fan motors, supply fan motor and electric heater.
- Thyristor for electric heater for modulated stepless control.
- Microprocessor-based main control board with a built-in HMI.
- Unit door mounted external keypad (HMI) with simple graphics.
- Electronic expansion valve driver, with stand-alone DC power supply.
- Humidifier advanced controller, for fully stand-alone control.
- Flood detection module, connected with spot flood sensors at the floor of the room.
- Voltage monitoring module with fuses, for protection against under voltage, over voltage, phase loss, phase reversal and phase unbalance of the incoming voltage.
- Control Relays and control circuit breaker.
- Unit on/off switch.
- Power and Control terminal blocks.
- All compressors are with DOL start, as standard. Supply fans are EC fans (BLDC motors).
- Note that wiring to the **RCA** condenser fan motors from **SCRR** control panel to be done at site by others.
- Connection between Indoor **SCRR** unit and Outdoor **RCA** unit is via a junction box with well-defined wiring.

## SKM Microprocessor Controller



SKM Microprocessor controller is available for **SCRR** series as a standard feature. Our precision unit has a full function microprocessor controller, designed to keep the unit running at its most efficient level, under the hostile environment of HVAC industry. It provides flexibility with set points and control settings that can be selected during manufacturing level, during commissioning or when the unit is live and functioning.

Displays, unit status, measurements, alarms and other interfaces are accomplished in a clear and simple language that informs the user about the status of the system. It is designed to safeguard the unit that is being controlled, eliminate the need for manual intervention and to provide a simple but meaningful Human machine interface.

SKM Microprocessor controller provides complete operational control for the unit and has built-in auto diagnostic capability that can signal normal operation or alarm conditions as well as shutting down the unit, if necessary.

SKM Microprocessor controller comes with a flush mounted sleek and elegant design HMI, fixed on unit door unit is via a junction box with well-defined wiring.




BMS interface through Modbus RTU protocol is available as default BMS protocol. Other communication protocols is available by using external communication cards, inserted on the controller board itself. These protocols include MODBUS TCP/IP, BACNET-IP & BACNET-MSTP.

## Factory Installed Options
### SCRR + RCA

As with all SKM air conditioning units, the **SCRR + RCA** Series available with multitude of optional features available on request:

### Alternative Condenser Material

Made of copper tubes and alternative fin material and/or protective coating.

- Aluminum Fins with Aeris post Coat Protection **(FAA)**.
- Pre-Coated aluminum fins **(FAP)**.
- Copper Fins **(FC)**.
- Copper Fins with Aeris post Coat Protection **(FCA)**.

### Alternative Evaporator Material

Made of copper tubes and alternative fin material and/or protective coating

- Aluminum Fins with Aeris post Coat Protection **(EFAA)** .
- Pre-Coated aluminum fins **(EFAP)** .
- Copper Fins **(EFC)**.
- Copper Fins with Aeris post Coat Protection **(EFCA)**.

### Western make Scroll Compressor (WMSC)

Western make scroll compressor

### Rotalock Valves on Compressors (RVC)

For additional facilitation of maintenance of unit

### Pressure Relief Valve (PRV)

To protect the unit from being over-pressurized.

### Stainless Steel Drain Pan (Grad 316) (SDP-316)

Heavy gauge 316 stainless steel drain pan under the entire cooling coil and moisture eliminator. Insulation under drain pan as per SKM standard.

### BMS Interface volt free contacts (BMVF)

Volt free contacts for run status, common fault status, auto mode status and provision for remote on/off shall be provided as option.
For other volt-free contact requirements, please contact SKM.

### BMSP (BMS Interface through Protocol)

For software BMS interacting the unit microprocessor with BMS protocols such as Bacnet MS/TP, Bacnet IP or Modbus IP.

## General Features
### SCRW

The **SCRW** Series Computer Room Air Conditioners are yet another new unique series from SKM incorporates many salient features which, together, provides a heavy duty, robust, long lasting commercial unit meant for high end data center applications. The **SCRW** series models combine cooling coil, plug evaporator fan, advanced controller, humidifier and heater in addition to premium safety and operational controls.

**SCRW** units provide an extremely rugged, long life, energy efficient, and precise control air conditioner that will provide cooling with higher efficiency over a long and extended period of time.

What makes **SCRW** series yet another model in the top class range of SKM products is the use of:

- Heavy duty cooling coils optimized and designed for a long life maintenance free operation.
- Cabinet construction specifically for gulf climate condition.
- Advanced controler for the unit operation.
- High efficiency steam humidifier.
- Electric heater (stepless control).
- 2-way valve for precise control.
- 3-way and PICV valves are available as option.

## Main Component Features

### Cooling Coils

All cooling coils are made of copper tubes mechanically bonded into corrugated aluminum fins to ensure optimum heat transfer. Coils conform to AHRI-410. All cooling coils are tested against leakage by 450psig (3100kPa) high pressure under water.

### Evaporator Fan & Drive

The fan is high efficient plug type , direct driven by EC motor with up to 33% greater efficiency than standard motor , to provide the optimal fan performance. Advantages of EC motors over conventional AC motors are:

- High efficiency.
- Integrated controller.
- Simple connections.
- Quite operation.
- Eco friendly and suitable for green building concept

### Filter Section

**SCRW** series are supplied with 2” thick pleated type filters with grade G4 as standard for all models. Filter mounted on the cooling coil for reduced airside pressure drop.

## Casing and Structure

The unit casing for **SCRW** is made of zinc coated galvanized steel sheets conforming to JIS-G3302 and ASTM A653 which is phosphatized and baked after an electrostatic powder coat of approximately 60 microns. This finish and coating can pass a 1000 hour in 5% salt spray testing at 95°F (35°C) and 95% relative humidity as per ASTM B117. Panels and casing are insulated with 1" (25mm) thick fiberglass (with BGT coating) thermal and acoustic insulation having density of 2 lb/ft³. (32 kg/m³) and thermal conductivity of 0.23 BTU.in/ft²°Fh (0.033 W/m°K). Insulation meets the requirements of NFPA 90A and 90B for fire resistance. Raised floor stand as option available.

## Steam Humidifier

The steam humidifier is of the immersed electrode type and is based on the most advanced microprocessor technology. It is complete with cleanable cylinder, fill and drain valves, stainless steel distributor and electronic control.

Refer next table for the Humidifier Capacity based on the models.

| SCRW | HUMIDIFIER (kg/hr) |
|---|---|
| 51016 / 61016 | 5 |
| 51020 / 61020 | 5 |
| 51024 / 61024 | 5 |
| 51028 / 61028 | 5 |
| 51036 / 61036 | 8 |
| 51047 / 61047 | 8 |
| 51050 / 61050 | 10 |
| 51058 / 61058 | 10 |
| 52080 / 61080 | 15 |
| 51100 / 61100 | 15 |

Table 3

## Two-way Valve

Motorized two-way valve to regulate the water flow , and improve the efficiency and the anti-oscillation function.

## Solder Pipe Connection

SCRW pipe connection is solder type as standard. MPT and Flanged connections available as an option.

## Electric Heater

Electric heating batteries are made up of finned heating elements, constructed from high quality 80/20 nickel chrome resistance wire centred in metal tube by compressed magnesium oxide. Helical fins are tightly wound around the tubular heating element. These heaters are provided with circuit breaker, contactor, thyristor and thermal safety cutouts. Thyristor control provides precise control of the heater to achieve an accurate temperature and humidity control.

Refer next table for the electric heater kilowatts based on the models.

| SCRW | HEATER (KW) |
|---|---|
| 51016 / 61016 | 6 |
| 51020 / 61020 | 6 |
| 51024 / 61024 | 6 |
| 51028 / 61028 | 6 |
| 51036 / 61036 | 7.5 |
| 51047 / 61047 | 7.5 |
| 51050 / 61050 | 10.5 |
| 51058 / 61058 | 10.5 |
| 52080 / 61080 | 15 |
| 51100 / 61100 | 15 |

Table 4

## Stainless Steel Drain Pan

Stainless steel drain pan(Grade 304). Insulation under drain pan as per SKM standard.

## Control Panel

Unit-mounted control panel is fabricated out of heavy gauge sheet steel in phosphatized powder coated baked finish. A hinged access door and lockable handle is provided for easy access and security, for the unit and the control panel. The panel is factory wired in accordance with NEC 430 & 440, labelled, tagged and features 220-230V controls. Below are the standard components provided in any SCRW control panel.

- Isolator on the main incomer with external door handle
- Individual contactors for electric heater and humidifier.
- Individual circuit breakers for supply fan motor & electric heater.
- Thyristor for electric heater for modulated stepless control.
- Microprocessor-based main control board with a built-in HMI.
- Unit door mounted external keypad (HMI) with simple graphics.
- Humidifier advanced controller, for fully stand-alone control.
- Flood detection module, connected with spot flood sensors at the floor of the room.
- Voltage monitoring module with fuses, for protection again under voltage, over voltage, phase loss, phase reversal and phase unbalance of the incoming voltage.
- Control Relays and control circuit breaker.
- Unit on/off switch.
- Power and Control terminal blocks.

## SKM Microprocessor Controller



SKM Microprocessor controller is available for **SCRW** series as a standard feature. Our precision unit has a full function microprocessor controller, designed to keep the unit running at its most efficient level, under the hostile environment of HVAC industry. It provides flexibility with set points and control settings that can be selected during manufacturing level, during commissioning or when the unit is live and functioning.
Displays, unit status, measurements, alarms and other interfaces are accomplished in a clear and simple language that informs the user about the status of the system. It is designed to safeguard the unit that is being controlled, eliminate the need for manual intervention and to provide a simple but meaningful Human machine interface.
SKM Microprocessor controller provides complete operational control for the unit and has built-in auto diagnostic capability that can signal normal operation or alarm conditions as well as shutting down the unit, if necessary.
SKM Microprocessor controller comes with a flush mounted sleek and elegant design touch HMI, fixed on unit door.
BMS interface through Modbus RTU protocol is available as default BMS protocol. Other communication protocols is available by using external communication cards, inserted on the controller board itself. These protocols include MODBUS TCP/IP, BACNET-IP & BACNET-MSTP.

# Factory Installed Options
## SCRW

As with all SKM air conditioning units, the **SCRW** Series available with multitude of optional features available on request:

### Alternative Cooling Coil Material

Made of copper tubes and alternative fin material and/or protective coating

- Aluminum Fins with Aeris post Coat Protection **(EFAA)** .
- Pre-Coated aluminum fins **(EFAP)** .
- Copper Fins **(EFC)**.
- Copper Fins with Aeris post Coat Protection **(EFCA)**.

### Three-way Valve (3WV)

Motorized three-way valve to regulate the water flow , in the case of constant flow system where bypass line is required.

### PICV Valve (PICV)

Pressure independent control of water flow maintains equal percentage control characteristic at all flow rate settings . it will regulate the chilled water flow by adjusting the actuator position, to maintain the correct water flow and supply air temperature at all times.

### Stainless Steel Drain Pan (SSP)

Heavy gauge 316 stainless steel drain pan under the entire cooling coil and moisture eliminator. Insulation under drain pan as per SKM standard.

### BMS Interface volt free contacts (BMVF)

Volt free contacts for run status, common fault status, auto mode status and provision for remote on/off shall be provided as option.
For other volt-free contact requirements, please contact SKM.

### BMSP (BMS Interface through Protocol)

For interacting the unit microprocessor with BMS protocols such as Lonworks, Bacnet MS/TP, Bacnet IP or Modbus IP.

### Alternative pipe Connection Type

Male Pipe Thread (**MPT**)
Flanged Connection (**GPT**)

## GENERAL DATA - REMOTE CONDENSING UNIT - RCA 50Hz

| Outdoor Unit | | RCA | 51022 | 51026 | 51028 | 51037 | 51046 | 52046 |
|---|---|---|---|---|---|---|---|---|
| Matched SCRR | | SCRR | 51017 | 51020 | 51024 | 51030 | 51036 | 52036 |
| Outdoor Coil | Type | - | Hi-X Tubes | | | | | |
| | Face Area | $ft^2$ | 11.1 | 11.1 | 11.1 | 17.8 | 17.8 | 17.8 |
| | | $m^2$ | 1.0 | 1.0 | 1.0 | 1.7 | 1.7 | 1.7 |
| Outdoor Fan | Type | - | Propeller Direct Drive | | | | | |
| | Code / Quantity | - | 630/1 | 630/1 | 630/1 | 630/2 | 630/2 | 630/2 |
| Outdoor Motor | Type | - | Totally enclosed fan | | | | | |
| | Size / Quantity | kW | 0.47 / 1 | 0.47 / 1 | 0.47 / 1 | 0.47 / 2 | 0.47 / 2 | 0.47 / 2 |
| Number of Refrigerant Circuits | | - | 1 | 1 | 1 | 1 | 1 | 2 |
| Connection | Liquid | in | 1/2 | 1/2 | 1/2 | 5/8 | 5/8 | 1/2 |
| | Discharge | in | 5/8 | 5/8 | 7/8 | 7/8 | 7/8 | 5/8 |
| Unit Operating Weight | | lbs | 217 | 240 | 243 | 374 | 388 | 388 |
| | | kg | 98 | 109 | 110 | 170 | 176 | 176 |

Table 5

| Outdoor Unit | | RCA | 51052 | 52052 | 52055 | 52074 | 52078 | 52080 |
|---|---|---|---|---|---|---|---|---|
| Matched SCRR | | SCRR | 51042 | 52042 | 52048 | 52063 | 52070 | 52075 |
| Outdoor Coil | Type | - | Hi-X Tubes | | | | | |
| | Face Area | $ft^2$ | 21.4 | 21.4 | 21.4 | 30.6 | 30.6 | 30.6 |
| | | $m^2$ | 2.0 | 2.0 | 2.0 | 2.8 | 2.8 | 2.8 |
| Outdoor Fan | Type | - | Properller Direct drive | | | | | |
| | Code / Quantity | - | 630/2 | 630/2 | 630/2 | 630/3 | 630/3 | 630/3 |
| Outdoor Motor | Type | - | Totally enclosed fan | | | | | |
| | Size / Quantity | kW | 0.47 / 2 | 0.47 / 2 | 0.47 / 2 | 0.47 / 3 | 0.47 / 3 | 0.47 / 3 |
| Number of Refrigerant Circuits | | - | 1 | 2 | 2 | 2 | 2 | 2 |
| Connection | Liquid | in | 5/8 | 1/2 | 1/2 | 5/8 | 5/8 | 5/8 |
| | Discharge | in | 7/8 | 5/8 | 7/8 | 7/8 | 7/8 | 7/8 |
| Unit Operating Weight | | lbs | 431 | 437 | 440 | 610 | 615 | 615 |
| | | kg | 195 | 198 | 200 | 277 | 279 | 279 |

Table 6

**Notes:**

(1) Connections are based on 50 ft equivalent length between the outdoor & indoor unit.

## GENERAL DATA - COMPUTER ROOM AIR CONDITIONER - SCRR 50Hz

| Indoor Unit | | SCRR | 51017 | 51020 | 51024 | 51030 | 51036 | 52036 |
|---|---|---|---|---|---|---|---|---|
| Matched RCA | | RCA | 51022 | 51026 | 51028 | 51037 | 51046 | 52046 |
| Cooling Capacity (C1) | | MBH | 53.3 | 68.1 | 77.4 | 101.7 | 118.5 | 111.6 |
| | | kW | 15.6 | 20.0 | 22.7 | 29.8 | 34.7 | 32.7 |
| Cooling Capacity (C2) | | MBH | 57.3 | 70.1 | 80.9 | 104.8 | 123.2 | 116.5 |
| | | kW | 16.8 | 20.5 | 23.7 | 30.7 | 36.1 | 34.1 |
| Compressor | Type | - | Hermetic Scroll | | | | | |
| | Quantity | - | 1 | 1 | 1 | 1 | 1 | 2 |
| | Oil Charge Ckt (A / B) | US Gal | 0.5 | 0.5 | 0.7 | 0.9 | 0.9 | 0.9 |
| | | Liter | 1.9 | 1.9 | 2.6 | 3.4 | 3.4 | 3.4 |
| Indoor Coil | Type | - | Hi-X Tubes | | | | | |
| | Face Area | $ft^2$ | 5.0 | 5.0 | 7.5 | 7.5 | 10.5 | 10.5 |
| | | $m^2$ | 0.5 | 0.5 | 0.7 | 0.7 | 1.0 | 1.0 |
| Indoor Fan | Type | - | Plug Fan | | | | | |
| | Code / Quantity | - | 355 / 1 | 355 / 1 | 355 / 1 | 450 / 1 | 450 / 1 | 450 / 1 |
| | Air flow Rate | cfm | 2200 | 2500 | 3200 | 3750 | 4500 | 4500 |
| | | l/s | 1038.3 | 1179.9 | 1510.2 | 1769.8 | 2123.8 | 2123.8 |
| Indoor Motor | Type | - | EC | | | | | |
| | Size / Quantity | kW | 2.1/1 | 2.1/1 | 2.1/1 | 2.4/1 | 2.4/1 | 2.4/1 |
| Refrigerant Operating Charge R-410A | | lbs | 10 | 13 | 17 | 16 | 23 | 22 |
| | | kg | 4.5 | 5.9 | 7.7 | 7.3 | 10.4 | 10.0 |
| Number of Refrigerant Circuits | | - | 1 | 1 | 1 | 1 | 1 | 2 |
| Unit Operating Weight | | lbs | 703 | 716 | 917 | 939 | 1113 | 1381 |
| | | kg | 319 | 325 | 416 | 426 | 505 | 626 |

Table 7

| Indoor Unit | | SCRR | 51042 | 52042 | 52048 | 52063 | 52070 | 52075 |
|---|---|---|---|---|---|---|---|---|
| Matched RCA | | RCA | 51052 | 52052 | 52055 | 52074 | 52078 | 52080 |
| Cooling Capacity (C1) | | MBH | 131.5 | 136.3 | 156.5 | 207.1 | 228.6 | 247.8 |
| | | kW | 38.5 | 39.9 | 45.9 | 60.7 | 67.0 | 72.6 |
| Cooling Capacity (C2) | | MBH | 137.8 | 140.7 | 164.1 | 215.1 | 236.5 | 254.9 |
| | | kW | 40.4 | 41.2 | 48.1 | 63.0 | 69.3 | 74.7 |
| Compressor | Type | - | Hermetic Scroll | | | | | |
| | Quantity | - | 1 | 2 | 2 | 2 | 2 | 2 |
| | Oil Charge Ckt (A / B) | US Gal | 0.9 | 0.9 | 1.3 | 1.7 | 1.7 | 1.7 |
| | | Liter | 3.4 | 3.4 | 4.9 | 6.4 | 6.4 | 6.4 |
| Indoor Coil | Type | - | Hi-X Tubes | | | | | |
| | Face Area | $ft^2$ | 10.5 | 10.5 | 17.5 | 17.5 | 17.5 | 17.5 |
| | | $m^2$ | 1.0 | 1.0 | 1.6 | 1.6 | 1.6 | 1.6 |
| Indoor Fan | Type | - | Plug Fan | | | | | |
| | Code / Quantity | - | 450 / 1 | 450 / 1 | 355 / 2 | 450 / 2 | 450 / 2 | 450 / 2 |
| | Air flow Rate | cfm | 5000 | 5000 | 6500 | 8000 | 9000 | 9500 |
| | | l/s | 2359.7 | 2359.7 | 3067.7 | 3775.6 | 4247.5 | 4483.5 |
| Indoor Motor | Type | - | EC | | | | | |
| | Size / Quantity | kW | 2.4/1 | 2.4/1 | 2.1/2 | 2.4/2 | 2.4/2 | 2.4/2 |
| Refrigerant Operating Charge R-410A | | lbs | 26 | 24 | 32 | 37 | 46 | 46 |
| | | kg | 11.8 | 11.1 | 14.7 | 16.8 | 21.0 | 20.9 |
| Number of Refrigerant Circuits | | - | 1 | 2 | 2 | 2 | 2 | 2 |
| Unit Operating Weight | | lbs | 1128 | 1387 | 1982 | 2048 | 2068 | 2087 |
| | | kg | 512 | 629 | 899 | 929 | 938 | 947 |

Table 8

**Notes:**

(1) Rated Capacity(C1) is based on AHRI Standard 1360 . Evaporator entering air conditions of 75°/61°F (23.9°/16°C) dry bulb/wet bulb and condenser entering air temperature of 95°F (35°C) dry bulb

(2) Rated Capacity(C2) is based on AHRI Standard 1360 . Evaporator entering air conditions of 85°/64.2°F (29.4°/17.9°C) dry bulb/wet bulb and condenser entering air temperature of 95°F (35°C) dry bulb

(3) Cooling capacity mentioned is gross which does not include the effect of evaporator fan motor heat.

# GENERAL DATA - REMOTE CONDENSING UNIT - RCA 60Hz

| Outdoor Unit | | RCA | 61023 | 61028 | 61030 | 61040 | 61050 | 62050 |
|---|---|---|---|---|---|---|---|---|
| Matched SCRR | | SCRR | 61018 | 61020 | 61025 | 61030 | 61037 | 62037 |
| Outdoor Coil | Type | - | Hi-X Tubes | | | | | |
| | Face Area | $ft^2$ | 11.1 | 11.1 | 11.1 | 17.8 | 17.8 | 17.8 |
| | | $m^2$ | 1.0 | 1.0 | 1.0 | 1.7 | 1.7 | 1.7 |
| Outdoor Fan | Type | - | Propeller Direct Drive | | | | | |
| | Code / Quantity | - | 630/1 | 630/1 | 630/1 | 630/2 | 630/2 | 630/2 |
| Outdoor Motor | Type | - | Totally enclosed fan | | | | | |
| | Size / Quantity | kW | 0.64 / 1 | 0.64 / 1 | 0.64 / 1 | 0.64 / 2 | 0.64 / 2 | 0.64 / 2 |
| Number of Refrigerant Circuits | | - | 1 | 1 | 1 | 1 | 1 | 2 |
| Connection | Liquid | in | 1/2 | 1/2 | 1/2 | 5/8 | 5/8 | 1/2 |
| | Discharge | in | 5/8 | 5/8 | 7/8 | 7/8 | 7/8 | 5/8 |
| Unit Operating Weight | | lbs | 217 | 240 | 243 | 374 | 388 | 388 |
| | | kg | 98 | 109 | 110 | 170 | 176 | 176 |

Table 9

| Outdoor Unit | | RCA | 61055 | 62055 | 62058 | 62082 | 62086 | 62088 |
|---|---|---|---|---|---|---|---|---|
| Matched SCRR | | SCRR | 61042 | 62042 | 62052 | 62064 | 62073 | 62080 |
| Outdoor Coil | Type | - | Hi-X Tubes | | | | | |
| | Face Area | $ft^2$ | 21.4 | 21.4 | 21.4 | 30.6 | 30.6 | 30.6 |
| | | $m^2$ | 2.0 | 2.0 | 2.0 | 2.8 | 2.8 | 2.8 |
| Outdoor Fan | Type | - | Properller Direct drive | | | | | |
| | Code / Quantity | - | 630/2 | 630/2 | 630/2 | 630/3 | 630/3 | 630/3 |
| Outdoor Motor | Type | - | Totally enclosed fan | | | | | |
| | Size / Quantity | kW | 0.64 / 2 | 0.64 / 2 | 0.64 / 2 | 0.64 / 3 | 0.64 / 3 | 0.64 / 3 |
| Number of Refrigerant Circuits | | - | 1 | 2 | 2 | 2 | 2 | 2 |
| Connection | Liquid | - | 5/8 | 1/2 | 1/2 | 5/8 | 5/8 | 5/8 |
| | Discharge | - | 7/8 | 5/8 | 7/8 | 7/8 | 7/8 | 7/8 |
| Unit Operating Weight | | lbs | 431 | 437 | 440 | 610 | 615 | 615 |
| | | kg | 195 | 198 | 200 | 277 | 279 | 279 |

Table 10

**Notes:**

(1) Connections are based on 50 ft equivalent length between the outdoor & indoor unit.

## GENERAL DATA - COMPUTER ROOM AIR CONDITIONER - SCRR 60Hz

| Indoor Unit | | SCRR | 61018 | 61020 | 61025 | 61030 | 61037 | 62037 |
|---|---|---|---|---|---|---|---|---|
| Matched RCA | | RCA | 61023 | 61028 | 61030 | 61040 | 61050 | 62050 |
| Cooling Capacity (C1) | | MBH | 57.0 | 66.1 | 83.1 | 104.0 | 125.0 | 118.6 |
| | | kW | 16.7 | 19.4 | 24.4 | 30.5 | 36.6 | 34.8 |
| Cooling Capacity (C2) | | MBH | 58.3 | 68.3 | 86.6 | 106.9 | 129.3 | 123.4 |
| | | kW | 17.1 | 20.0 | 25.4 | 31.3 | 37.9 | 36.2 |
| Compressor | Type | - | Hermetic Scroll | | | | | |
| | Quantity | - | 1 | 1 | 1 | 1 | 1 | 2 |
| | Oil Charge Ckt (A / B) | US Gal | 0.5 | 0.4 | 0.4 | 0.9 | 0.9 | 1.0 |
| | | Liter | 1.9 | 1.5 | 1.5 | 3.4 | 3.4 | 3.8 |
| Indoor Coil | Type | - | Hi-X Tubes | | | | | |
| | Face Area | $ft^2$ | 5.0 | 5.0 | 7.5 | 7.5 | 10.5 | 10.5 |
| | | $m^2$ | 0.5 | 0.5 | 0.7 | 0.7 | 1.0 | 1.0 |
| Indoor Fan | Type | - | Plug Fan | | | | | |
| | Code / Quantity | - | 355 / 1 | 355 / 1 | 355 / 1 | 450 / 1 | 450 / 1 | 450 / 1 |
| | Air flow Rate | cfm | 2200 | 2500 | 3200 | 3750 | 4500 | 4500 |
| | | l/s | 1038.3 | 1179.9 | 1510.2 | 1769.8 | 2123.8 | 2123.8 |
| Indoor Motor | Type | - | EC | | | | | |
| | Size / Quantity | kW | 2.1/1 | 2.1/1 | 2.1/1 | 2.4/1 | 2.4/1 | 2.4/1 |
| Refrigerant Operating Charge R-410A | | lbs | 10 | 13 | 17 | 16 | 23 | 22 |
| | | kg | 4.5 | 5.9 | 7.7 | 7.3 | 10.4 | 10.0 |
| Number of Refrigerant Circuits | | - | 1 | 1 | 1 | 1 | 1 | 2 |
| Unit Operating Weight | | lbs | 703 | 716 | 917 | 393 | 1113 | 388 |
| | | kg | 319 | 325 | 416 | 178 | 505 | 176 |

**Table 11**

| Indoor Unit | | SCRR | 61042 | 62042 | 62052 | 62064 | 62073 | 62080 |
|---|---|---|---|---|---|---|---|---|
| Matched RCA | | RCA | 61055 | 62055 | 62058 | 62082 | 62086 | 62088 |
| Cooling Capacity (C1) | | MBH | 139.4 | 132.3 | 168.1 | 211.7 | 241.9 | 263.3 |
| | | kW | 40.9 | 38.8 | 49.3 | 62.0 | 70.9 | 77.2 |
| Cooling Capacity (C2) | | MBH | 143.5 | 136.9 | 175.9 | 219.5 | 249.0 | 269.1 |
| | | kW | 42.1 | 40.1 | 51.6 | 64.3 | 73.0 | 78.9 |
| Compressor | Type | - | Hermetic Scroll | | | | | |
| | Quantity | - | 1 | 2 | 2 | 2 | 2 | 2 |
| | Oil Charge Ckt (A / B) | US Gal | 0.9 | 0.9 | 0.9 | 1.7 | 1.7 | 1.7 |
| | | Liter | 3.4 | 3.4 | 3.4 | 6.4 | 6.4 | 6.4 |
| Indoor Coil | Type | - | Hi-X Tubes | | | | | |
| | Face Area | $ft^2$ | 10.5 | 10.5 | 17.5 | 17.5 | 17.5 | 17.5 |
| | | $m^2$ | 1.0 | 1.0 | 1.6 | 1.6 | 1.6 | 1.6 |
| Indoor Fan | Type | - | Plug Fan | | | | | |
| | Code / Quantity | - | 450 / 1 | 450 / 1 | 355 / 2 | 450 / 2 | 450 / 2 | 450 / 2 |
| | Air flow Rate | cfm | 5000 | 5000 | 6500 | 8000 | 9000 | 9500 |
| | | l/s | 2359.7 | 2359.7 | 3067.7 | 3775.6 | 4247.5 | 4483.5 |
| Indoor Motor | Type | - | EC | | | | | |
| | Size / Quantity | kW | 2.4/1 | 2.4/1 | 2.1/2 | 2.4/2 | 2.4/2 | 2.4/2 |
| Refrigerant Operating Charge R-410A | | lbs | 26 | 24 | 32 | 37 | 46 | 46 |
| | | kg | 11.8 | 10.9 | 14.5 | 16.8 | 20.9 | 20.9 |
| Number of Refrigerant Circuits | | - | 1 | 2 | 2 | 2 | 2 | 2 |
| Unit Operating Weight | | lbs | 1128 | 1387 | 1982 | 2048 | 2068 | 2087 |
| | | kg | 512 | 629 | 899 | 929 | 938 | 947 |

**Table 12**

**Notes:**

(1) Rated Capacity(C1) is based on AHRI Standard 1360 & SASO 2874. Evaporator entering air conditions of 75°/61°F (23.9°/16°C) dry bulb/wet bulb and condenser entering air temperature of 95°F (35°C) dry bulb

(2) Rated Capacity(C2) is based on AHRI Standard 1360 & SASO 2874. Evaporator entering air conditions of 85°/64.2°F (29.4°/17.9°C) dry bulb/wet bulb and condenser entering air temperature of 95°F (35°C) dry bulb

(3) Cooling capacity mentioned is gross which does not include the effect of evaporator fan motor heat.

# GENERAL DATA - COMPUTER ROOM AIR CONDITIONER - SCRW 50 & 60Hz

| Indoor Unit | | SCRW | 51016/61016 | 51021/61021 | 51024/61024 | 51028/61028 | 51036/61036 |
|---|---|---|---|---|---|---|---|
| Cooling Capacity (C1) | | MBH | 56.4 | 73.8 | 81.6 | 101.8 | 116.0 |
| | | kW | 16.5 | 21.6 | 23.9 | 29.8 | 34.0 |
| Cooling Capacity (C2) | | MBH | 72.7 | 91.9 | 102.4 | 138.6 | 162.4 |
| | | kW | 21.3 | 26.9 | 30.0 | 40.6 | 47.6 |
| Cooling Coil | Type | - | Plain Tubes | | | | |
| | Face Area | $ft^2$ | 5.0 | 5.0 | 7.5 | 7.5 | 10.5 |
| | | $m^2$ | 0.5 | 0.5 | 0.7 | 0.7 | 1.0 |
| Fan | Type | - | Plug Fan | | | | |
| | Code / Quantity | - | 355 / 1 | 355 / 1 | 355 / 1 | 355 / 1 | 450 / 1 |
| | Air flow Rate | cfm | 2500 | 2500 | 3200 | 3500 | 5000 |
| | | l/s | 1180.0 | 1180.0 | 1510.0 | 1510.0 | 2596.0 |
| Motor | Type | - | EC | | | | |
| | Size / Quantity | kW | 2.1/1 | 2.1/1 | 2.1/1 | 2.1/1 | 2.4/1 |
| Unit Operating Weight | | lbs | 590 | 618 | 750 | 793 | 944 |
| | | kg | 268 | 280 | 340 | 360 | 428 |

Table 13

| Indoor Unit | | SCRW | 51047/61047 | 51050/61050 | 51058/61058 | 51080/61080 | 51100/61100 |
|---|---|---|---|---|---|---|---|
| Cooling Capacity (C1) | | MBH | 161.3 | 167.9 | 197.6 | 268.2 | 351.4 |
| | | kW | 47.3 | 49.2 | 57.9 | 78.6 | 103.0 |
| Cooling Capacity (C2) | | MBH | 209.0 | 234.3 | 275.8 | 365.9 | 456.3 |
| | | kW | 61.3 | 68.7 | 80.8 | 107.2 | 133.7 |
| Cooling Coil | Type | - | Plain Tubes | | | | |
| | Face Area | $ft^2$ | 10.5 | 17.5 | 17.5 | 17.5 | 22.7 |
| | | $m^2$ | 1.0 | 1.6 | 1.6 | 1.6 | 2.1 |
| Fan | Type | - | Plug Fan | | | | |
| | Code / Quantity | - | 450 / 1 | 355 / 2 | 450 / 2 | 450 / 2 | 355 / 3 |
| | Air flow Rate | cfm | 5500 | 7000 | 9000 | 9500 | 12000 |
| | | l/s | 2596.0 | 3304.0 | 4484.0 | 4484.0 | 5663.0 |
| Motor | Type | - | EC | | | | |
| | Size / Quantity | kW | 2.4/1 | 2.1/2 | 2.4/2 | 2.4/2 | 2.1/3 |
| Unit Operating Weight | | lbs | 1002 | 1391 | 1404 | 1499 | 1561 |
| | | kg | 454 | 631 | 637 | 680 | 708 |

Table 14

**Notes:**

(1) Rated Capacity(C1) is based on AHRI Standard 1360 & SASO 2874. Evaporator entering air conditions of 75°/61°F (23.9°/16°C) dry bulb/wet bulb and condenser entering air temperature of 95°F (35°C) dry bulb

(2) Rated Capacity(C2) is based on AHRI Standard 1360 & SASO 2874. Evaporator entering air conditions of 85°/64.2°F (29.4°/17.9°C) dry bulb/wet bulb and condenser entering air temperature of 95°F (35°C) dry bulb

(3) Cooling capacity mentioned is gross which does not include the effect of evaporator fan motor heat.

(4) For detailed Perfomance Selection, please contact SKM.

## GROSS CAPACITY RATINGS - SCRR + RCA 50Hz

| Model SCRR + RCA | AFR cfm | AFR l/s | EWB | | Condenser Entering Air Temperature | | | | | | | | | | | | | | | | | | | | |
|---|---|---|---|---|---|---|---|---|---|---|---|---|---|---|---|---|---|---|---|---|---|---|---|---|---|
| | | | | | 95°F (35°C) | | | | | 105°F (40.6°C) | | | | | 115°F (46.1°C) | | | | | 125°F (51.7°C) | | | | |
| | | | | | Total Capacity | | Sensible Capacity | | PI* | Total Capacity | | Sensible Capacity | | PI* | Total Capacity | | Sensible Capacity | | PI* | Total Capacity | | Sensible Capacity | | PI* |
| | (BPF) | °F | °C | MBh | kW | MBh | kW | kW | MBh | kW | MBh | kW | kW | MBh | kW | MBh | kW | kW | MBh | kW | MBh | kW | kW |
| 51017 + 51022 | 1800 | 61 | 16.1 | 52.5 | 15.4 | 42.7 | 12.5 | 4.4 | 48.8 | 14.3 | 41.1 | 12.1 | 5.1 | 45.0 | 13.2 | 39.5 | 11.6 | 5.7 | 41.5 | 12.2 | 38.1 | 11.2 | 6.3 |
| | 850 | 63 | 17.2 | 54.1 | 15.9 | 39.3 | 11.5 | 4.5 | 50.9 | 14.9 | 38.0 | 11.1 | 5.1 | 47.4 | 13.9 | 36.5 | 10.7 | 5.7 | 43.6 | 12.8 | 35.0 | 10.3 | 6.3 |
| | 0.2 | 65 | 18.3 | 55.9 | 16.4 | 35.8 | 10.5 | 4.5 | 52.7 | 15.4 | 34.5 | 10.1 | 5.1 | 49.3 | 14.5 | 33.2 | 9.7 | 5.8 | 45.9 | 13.4 | 31.9 | 9.4 | 6.3 |
| | 2200 | 61 | 16.1 | 53.3 | 15.6 | 46.7 | 13.7 | 4.5 | 49.5 | 14.5 | 45.1 | 13.2 | 5.1 | 45.8 | 13.4 | 43.6 | 12.8 | 5.7 | 42.4 | 12.4 | 42.2 | 12.4 | 6.3 |
| | 1038 | 63 | 17.2 | 55.6 | 16.3 | 42.9 | 12.6 | 4.5 | 52.0 | 15.3 | 41.5 | 12.2 | 5.1 | 48.0 | 14.1 | 39.9 | 11.7 | 5.7 | 44.3 | 13.0 | 38.5 | 11.3 | 6.3 |
| | 0.2 | 65 | 18.3 | 57.4 | 16.8 | 38.9 | 11.4 | 4.6 | 54.1 | 15.9 | 37.6 | 11.0 | 5.2 | 50.4 | 14.8 | 36.2 | 10.6 | 5.8 | 46.5 | 13.6 | 34.8 | 10.2 | 6.4 |
| | 2600 | 61 | 16.1 | 53.8 | 15.8 | 50.4 | 14.8 | 4.5 | 50.2 | 14.7 | 49.0 | 14.4 | 5.1 | 46.5 | 13.6 | 46.5 | 13.6 | 5.7 | 43.0 | 12.6 | 43.0 | 12.6 | 6.3 |
| | 1227 | 63 | 17.2 | 56.5 | 16.6 | 46.2 | 13.6 | 4.5 | 52.5 | 15.4 | 44.7 | 13.1 | 5.1 | 48.6 | 14.2 | 43.2 | 12.7 | 5.7 | 45.0 | 13.2 | 41.9 | 12.3 | 6.3 |
| | 0.3 | 65 | 18.3 | 58.6 | 17.2 | 41.7 | 12.2 | 4.6 | 55.1 | 16.1 | 40.5 | 11.9 | 5.2 | 50.9 | 14.9 | 38.9 | 11.4 | 5.8 | 47.0 | 13.8 | 37.5 | 11.0 | 6.4 |
| 51020 + 51026 | 2000 | 61 | 16.1 | 66.6 | 19.5 | 53.1 | 15.6 | 5.5 | 62.6 | 18.4 | 51.3 | 15.0 | 6.3 | 58.2 | 17.0 | 49.4 | 14.5 | 7.1 | 54 | 15.8 | 48 | 14.0 | 7.8 |
| | 944 | 63 | 17.2 | 68.7 | 20.1 | 48.9 | 14.3 | 5.6 | 65.1 | 19.1 | 47.4 | 13.9 | 6.4 | 61.2 | 17.9 | 45.8 | 13.4 | 7.2 | 56.7 | 16.6 | 43.9 | 12.9 | 7.9 |
| | 0.12 | 65 | 18.3 | 71.0 | 20.8 | 44.8 | 13.1 | 5.6 | 67.2 | 19.7 | 43.3 | 12.7 | 6.4 | 63.4 | 18.6 | 41.7 | 12.2 | 7.2 | 59.5 | 17.5 | 40.2 | 11.8 | 7.9 |
| | 2500 | 61 | 16.1 | 68.1 | 20.0 | 58.8 | 17.2 | 5.6 | 63.8 | 18.7 | 57.0 | 16.7 | 6.3 | 59.5 | 17.4 | 55.2 | 16.2 | 7.1 | 55.4 | 16.2 | 53.5 | 15.7 | 7.9 |
| | 1180 | 63 | 17.2 | 71.2 | 20.9 | 54.3 | 15.9 | 5.6 | 67.0 | 19.6 | 52.5 | 15.4 | 6.4 | 62.3 | 18.3 | 50.7 | 14.8 | 7.2 | 57.9 | 17.0 | 48.9 | 14.3 | 7.9 |
| | 0.14 | 65 | 18.3 | 73.7 | 21.6 | 49.3 | 14.4 | 5.7 | 69.7 | 20.4 | 47.7 | 14.0 | 6.5 | 65.5 | 19.2 | 46.1 | 13.5 | 7.3 | 60.7 | 17.8 | 44.4 | 13.0 | 8.0 |
| | 3000 | 61 | 16.1 | 69.0 | 20.2 | 64.2 | 18.8 | 5.6 | 64.8 | 19.0 | 62.5 | 18.3 | 6.4 | 60.5 | 17.7 | 60.5 | 17.7 | 7.2 | 56.4 | 16.5 | 56.4 | 16.5 | 7.9 |
| | 1416 | 63 | 17.2 | 72.5 | 21.2 | 58.9 | 17.3 | 5.6 | 67.8 | 19.9 | 57.1 | 16.7 | 6.4 | 63.2 | 18.5 | 55.3 | 16.2 | 7.2 | 58.9 | 17.3 | 53.7 | 15.7 | 7.9 |
| | 0.15 | 65 | 18.3 | 75.5 | 22.1 | 53.4 | 15.7 | 5.7 | 71.2 | 20.9 | 51.8 | 15.2 | 6.5 | 66.2 | 19.4 | 49.9 | 14.6 | 7.3 | 61.5 | 18.0 | 48.2 | 14.1 | 8.0 |
| 51024 + 51028 | 2600 | 61 | 16.1 | 75.6 | 22.2 | 64.8 | 19.0 | 6.0 | 70.7 | 20.7 | 62.7 | 18.4 | 7.0 | 65.7 | 19.3 | 60.6 | 17.8 | 7.9 | 61.0 | 17.9 | 58.7 | 17.2 | 8.6 |
| | 1227 | 63 | 17.2 | 79.1 | 23.2 | 59.9 | 17.5 | 6.1 | 73.7 | 21.6 | 57.7 | 16.9 | 7.0 | 68.5 | 20.1 | 55.5 | 16.3 | 7.9 | 63.7 | 18.7 | 53.6 | 15.7 | 8.6 |
| | 0.11 | 65 | 18.3 | 82.5 | 24.2 | 54.7 | 16.0 | 6.3 | 77.1 | 22.6 | 52.6 | 15.4 | 7.1 | 71.5 | 21.0 | 50.4 | 14.8 | 8.0 | 66.3 | 19.4 | 48.5 | 14.2 | 8.7 |
| | 3200 | 61 | 16.1 | 77.4 | 22.7 | 72.1 | 21.1 | 6.1 | 72.4 | 21.2 | 70.1 | 20.5 | 7.0 | 67.4 | 19.8 | 67.4 | 19.8 | 7.9 | 62.8 | 18.4 | 62.8 | 18.4 | 8.6 |
| | 1510 | 63 | 17.2 | 80.6 | 23.6 | 66.0 | 19.3 | 6.2 | 75.4 | 22.1 | 63.9 | 18.7 | 7.1 | 70.2 | 20.6 | 61.9 | 18.1 | 8.0 | 65.3 | 19.1 | 60.0 | 17.6 | 8.6 |
| | 0.12 | 65 | 18.3 | 84.0 | 24.6 | 59.8 | 17.5 | 6.3 | 78.4 | 23.0 | 57.7 | 16.9 | 7.2 | 72.9 | 21.4 | 55.6 | 16.3 | 8.0 | 66.8 | 19.6 | 53.7 | 15.7 | 8.7 |
| | 3600 | 61 | 16.1 | 78.4 | 23.0 | 76.8 | 22.5 | 6.1 | 73.4 | 21.5 | 73.4 | 21.5 | 7.0 | 68.4 | 20.0 | 68.4 | 20.0 | 7.9 | 63.6 | 18.6 | 63.6 | 18.6 | 8.6 |
| | 1699 | 63 | 17.2 | 81.5 | 23.9 | 70.0 | 20.5 | 6.2 | 76.3 | 22.4 | 67.9 | 19.9 | 7.1 | 71.1 | 20.8 | 66.0 | 19.3 | 8.0 | 66.1 | 19.4 | 64.1 | 18.8 | 8.7 |
| | 0.13 | 65 | 18.3 | 84.8 | 24.8 | 63.1 | 18.5 | 6.4 | 79.2 | 23.2 | 61.0 | 17.9 | 7.2 | 73.7 | 21.6 | 59.0 | 17.3 | 8.0 | 68.6 | 20.1 | 57.1 | 16.7 | 8.7 |
| 51030 + 51037 | 3200 | 61 | 16.1 | 100.6 | 29.5 | 82.0 | 24.0 | 7.9 | 93.4 | 27.4 | 78.8 | 23.1 | 9.1 | 86.3 | 25.3 | 75.8 | 22.2 | 10.3 | 79.7 | 23.4 | 73.1 | 21.4 | 11.4 |
| | 1510 | 63 | 17.2 | 103.8 | 30.4 | 75.4 | 22.1 | 8.0 | 97.7 | 28.6 | 72.9 | 21.4 | 9.2 | 90.6 | 26.6 | 70.0 | 20.5 | 10.4 | 83.6 | 24.5 | 67.1 | 19.7 | 11.4 |
| | 0.12 | 65 | 18.3 | 107.3 | 31.4 | 68.9 | 20.2 | 8.0 | 101.1 | 29.6 | 66.4 | 19.5 | 9.3 | 94.7 | 27.7 | 63.9 | 18.7 | 10.4 | 88.1 | 25.8 | 61.3 | 18.0 | 11.4 |
| | 3750 | 61 | 16.1 | 101.7 | 29.8 | 88.1 | 25.8 | 7.9 | 94.7 | 27.7 | 85.1 | 24.9 | 9.1 | 87.7 | 25.7 | 82.2 | 24.1 | 10.3 | 81.2 | 23.8 | 79.6 | 23.3 | 11.4 |
| | 1770 | 63 | 17.2 | 106.4 | 31.2 | 81.2 | 23.8 | 8.0 | 99.4 | 29.1 | 78.3 | 23.0 | 9.2 | 91.8 | 26.9 | 75.3 | 22.1 | 10.4 | 85.1 | 24.9 | 72.7 | 21.3 | 11.4 |
| | 0.14 | 65 | 18.3 | 110.0 | 32.2 | 73.7 | 21.6 | 8.1 | 103.5 | 30.3 | 71.2 | 20.9 | 9.3 | 96.4 | 28.2 | 68.5 | 20.1 | 10.5 | 89.2 | 26.1 | 65.8 | 19.3 | 11.4 |
| | 4300 | 61 | 16.1 | 102.8 | 30.1 | 94.0 | 27.6 | 7.9 | 95.8 | 28.1 | 91.2 | 26.7 | 9.1 | 88.9 | 26.1 | 88.4 | 25.9 | 10.3 | 82.4 | 24.2 | 82.4 | 24.2 | 11.4 |
| | 2029 | 63 | 17.2 | 107.9 | 31.6 | 86.4 | 25.3 | 8.1 | 100.3 | 29.4 | 83.4 | 24.4 | 9.2 | 92.9 | 27.2 | 80.5 | 23.6 | 10.4 | 86.2 | 25.3 | 78.0 | 22.9 | 11.4 |
| | 0.15 | 65 | 18.3 | 112.0 | 32.8 | 78.3 | 22.9 | 8.2 | 105.2 | 30.8 | 75.7 | 22.2 | 9.4 | 97.2 | 28.5 | 72.7 | 21.3 | 10.5 | 90.1 | 26.4 | 70.1 | 20.6 | 11.5 |
| 51036 + 51046 | 4000 | 61 | 16.1 | 117.2 | 34.3 | 99.5 | 29.2 | 8.8 | 109.1 | 32.0 | 96.0 | 28.1 | 10.1 | 100.9 | 29.6 | 92.6 | 27.2 | 11.5 | 93.2 | 27.3 | 89.5 | 26.2 | 12.7 |
| | 1888 | 63 | 17.2 | 123.0 | 36.1 | 92.1 | 27.0 | 8.9 | 114.1 | 33.4 | 88.5 | 25.9 | 10.3 | 105.4 | 30.9 | 84.9 | 24.9 | 11.6 | 97.3 | 28.5 | 81.7 | 24.0 | 12.8 |
| | 0.11 | 65 | 18.3 | 127.4 | 37.3 | 84.0 | 24.6 | 9.0 | 119.7 | 35.1 | 80.9 | 23.7 | 10.4 | 110.2 | 32.3 | 77.2 | 22.6 | 11.7 | 101.6 | 29.8 | 74.0 | 21.7 | 12.9 |
| | 4500 | 61 | 16.1 | 118.5 | 34.7 | 105.4 | 30.9 | 8.8 | 110.5 | 32.4 | 102.1 | 29.9 | 10.2 | 102.4 | 30.0 | 98.7 | 28.9 | 11.5 | 94.7 | 27.7 | 94.7 | 27.7 | 12.8 |
| | 2124 | 63 | 17.2 | 124.1 | 36.4 | 97.0 | 28.4 | 9.0 | 115.3 | 33.8 | 93.5 | 27.4 | 10.3 | 106.7 | 31.3 | 90.1 | 26.4 | 11.7 | 98.7 | 28.9 | 87.0 | 25.5 | 12.9 |
| | 0.12 | 65 | 18.3 | 129.8 | 38.0 | 88.5 | 25.9 | 9.1 | 120.6 | 35.3 | 85.0 | 24.9 | 10.4 | 111.3 | 32.6 | 81.5 | 23.9 | 11.8 | 102.7 | 30.1 | 78.3 | 22.9 | 13.0 |
| | 5000 | 61 | 16.1 | 119.8 | 35.1 | 111.3 | 32.6 | 8.9 | 111.8 | 32.8 | 108.0 | 31.7 | 10.2 | 103.7 | 30.4 | 103.7 | 30.4 | 11.6 | 95.9 | 28.1 | 95.9 | 28.1 | 12.8 |
| | 2360 | 63 | 17.2 | 125.1 | 36.7 | 101.9 | 29.9 | 9.0 | 116.5 | 34.1 | 98.5 | 28.9 | 10.3 | 108.0 | 31.6 | 95.2 | 27.9 | 11.7 | 99.9 | 29.3 | 92.1 | 27.0 | 12.9 |
| | 0.13 | 65 | 18.3 | 130.9 | 38.4 | 92.6 | 27.1 | 9.1 | 121.5 | 35.6 | 89.1 | 26.1 | 10.5 | 112.3 | 32.9 | 85.6 | 25.1 | 11.8 | 103.8 | 30.4 | 82.5 | 24.2 | 13.0 |
| 52036 + 52046 | 4000 | 61 | 16.1 | 110.1 | 32.3 | 96.5 | 28.3 | 8.8 | 102.8 | 30.1 | 93.4 | 27.4 | 10.0 | 95.5 | 28.0 | 90.4 | 26.5 | 11.3 | 88.5 | 25.9 | 87.5 | 25.7 | 12.5 |
| | 1888 | 63 | 17.2 | 115.2 | 33.8 | 88.9 | 26.1 | 8.9 | 107.4 | 31.5 | 85.7 | 25.1 | 10.1 | 99.6 | 29.2 | 82.7 | 24.2 | 11.4 | 92.4 | 27.1 | 79.8 | 23.4 | 12.6 |
| | 0.11 | 65 | 18.3 | 120.6 | 35.4 | 81.3 | 23.8 | 9.0 | 112.3 | 32.9 | 78.0 | 22.9 | 10.3 | 103.9 | 30.5 | 74.9 | 21.9 | 11.5 | 96.1 | 28.2 | 71.9 | 21.1 | 12.7 |
| | 4500 | 61 | 16.1 | 111.6 | 32.7 | 102.5 | 30.0 | 8.9 | 104.3 | 30.6 | 99.5 | 29.2 | 10.1 | 96.9 | 28.4 | 96.5 | 28.3 | 11.3 | 89.8 | 26.3 | 89.8 | 26.3 | 12.5 |
| | 2124 | 63 | 17.2 | 116.4 | 34.1 | 94.0 | 27.5 | 9.0 | 108.7 | 31.9 | 90.9 | 26.6 | 10.2 | 101.0 | 29.6 | 87.9 | 25.8 | 11.4 | 93.7 | 27.5 | 85.1 | 24.9 | 12.6 |
| | 0.12 | 65 | 18.3 | 121.6 | 35.7 | 85.4 | 25.0 | 9.1 | 113.3 | 33.2 | 82.2 | 24.1 | 10.3 | 105.1 | 30.8 | 79.1 | 23.2 | 11.6 | 97.3 | 28.5 | 76.2 | 22.3 | 12.8 |
| | 5000 | 61 | 16.1 | 112.9 | 33.1 | 108.4 | 31.8 | 8.9 | 105.6 | 30.9 | 105.5 | 30.9 | 10.1 | 98.2 | 28.8 | 98.2 | 28.8 | 11.3 | 91.0 | 26.7 | 91.0 | 26.7 | 12.5 |
| | 2360 | 63 | 17.2 | 117.5 | 34.4 | 98.9 | 29.0 | 9.0 | 109.9 | 32.2 | 95.9 | 28.1 | 10.2 | 102.3 | 30.0 | 93.0 | 27.3 | 11.5 | 94.7 | 27.8 | 90.2 | 26.4 | 12.7 |
| | 0.13 | 65 | 18.3 | 122.5 | 35.9 | 89.4 | 26.2 | 9.1 | 114.3 | 33.5 | 86.3 | 25.3 | 10.3 | 106.1 | 31.1 | 83.3 | 24.4 | 11.6 | 98.3 | 28.8 | 80.5 | 23.6 | 12.8 |

Table 15

**Notes:**

1. See Page 2 for legend.
2. Ratings are based on 75°F (23.9°C) DB evaporator air entering temperature.
3. Direct interpolation is permissible. Do not extrapolate.
4. SKM Computer Selection Software are available for quick and accurate selections.
5. Capacity is gross capacity which does not include the effect of evaporator fan motor heat.

* Power input mentioned in this page should not be used for cable or fuse selection. MCA and MFA values given in the electrical data (page 20) should be referred for the same.

# GROSS CAPACITY RATINGS - SCRR + RCA 50Hz

| Model SCRR + RCA | AFR cfm | AFR l/s | EWB | | Condenser Entering Air Temperature | | | | | | | | | | | | | | | | | | | | | |
|---|---|---|---|---|---|---|---|---|---|---|---|---|---|---|---|---|---|---|---|---|---|---|---|---|---|---|
| | | | | | 95°F (35°C) | | | | | 105°F (40.6°C) | | | | | 115°F (46.1°C) | | | | | 125°F (51.7°C) | | | | |
| | | | | | Total Capacity | | Sensible Capacity | | PI* | Total Capacity | | Sensible Capacity | | PI* | Total Capacity | | Sensible Capacity | | PI* | Total Capacity | | Sensible Capacity | | PI* |
| | (BPF) | | °F | °C | MBh | kW | MBh | kW | kW | MBh | kW | MBh | kW | kW | MBh | kW | MBh | kW | kW | MBh | kW | MBh | kW | kW |
| 51042 + 51052 | 4500 | 2124 | 61 | 16.1 | 120.3 | 35.3 | 106.2 | 31.1 | 8.6 | 112.3 | 32.9 | 102.8 | 30.1 | 9.9 | 104.1 | 30.5 | 99.4 | 29.1 | 11.3 | 96.2 | 28.2 | 96.2 | 28.2 | 12.5 |
| | 5000 | 2360 | 63 | 17.2 | 126.1 | 37.0 | 97.8 | 28.7 | 8.7 | 117.3 | 34.4 | 94.3 | 27.6 | 10.0 | 108.6 | 31.8 | 90.8 | 26.6 | 11.4 | 100.4 | 29.4 | 87.6 | 25.7 | 12.6 |
| | 5500 | 2596 | 65 | 18.3 | 131.6 | 38.6 | 89.2 | 26.1 | 8.8 | 122.9 | 36.0 | 85.8 | 25.2 | 10.1 | 113.4 | 33.2 | 82.3 | 24.1 | 11.5 | 104.5 | 30.6 | 78.9 | 23.1 | 12.7 |
| | 4500 | 2124 | 61 | 16.1 | 121.6 | 35.6 | 112.0 | 32.8 | 8.6 | 113.6 | 33.3 | 108.7 | 31.9 | 9.9 | 105.4 | 30.9 | 105.4 | 30.9 | 11.3 | 97.4 | 28.6 | 97.4 | 28.6 | 12.6 |
| | 5000 | 2360 | 63 | 17.2 | 127.1 | 37.3 | 102.7 | 30.1 | 8.7 | 118.5 | 34.7 | 99.3 | 29.1 | 10.0 | 109.8 | 32.2 | 95.9 | 28.1 | 11.4 | 101.6 | 29.8 | 92.8 | 27.2 | 12.7 |
| | 5500 | 2596 | 65 | 18.3 | 133.1 | 39.0 | 93.4 | 27.4 | 8.8 | 123.7 | 36.3 | 89.9 | 26.3 | 10.1 | 114.4 | 33.5 | 86.4 | 25.3 | 11.5 | 105.6 | 31.0 | 83.1 | 24.4 | 12.8 |
| | 4500 | 2124 | 61 | 16.1 | 122.8 | 36.0 | 117.7 | 34.5 | 8.6 | 114.8 | 33.6 | 114.5 | 33.6 | 9.9 | 106.5 | 31.2 | 106.5 | 31.2 | 11.3 | 98.5 | 28.9 | 98.5 | 28.9 | 12.6 |
| | 5000 | 2360 | 63 | 17.2 | 128.1 | 37.5 | 107.5 | 31.5 | 8.7 | 119.6 | 35.0 | 104.2 | 30.5 | 10.0 | 110.9 | 32.5 | 100.9 | 29.6 | 11.4 | 102.6 | 30.1 | 97.7 | 28.6 | 12.7 |
| | 5500 | 2596 | 65 | 18.3 | 133.9 | 39.2 | 97.3 | 28.5 | 8.8 | 124.6 | 36.5 | 93.8 | 27.5 | 10.1 | 115.3 | 33.8 | 90.4 | 26.5 | 11.5 | 106.6 | 31.2 | 87.2 | 25.6 | 12.8 |
| 52042 + 52052 | 4500 | 2124 | 61 | 16.1 | 135.2 | 39.6 | 112.5 | 33.0 | 11.2 | 126.4 | 37.1 | 108.7 | 31.9 | 12.7 | 117.8 | 34.5 | 105.1 | 30.8 | 14.3 | 109.5 | 32.1 | 101.7 | 29.8 | 15.8 |
| | 5000 | 2360 | 63 | 17.2 | 140.7 | 41.2 | 103.8 | 30.4 | 11.3 | 133.0 | 39.0 | 100.7 | 29.5 | 12.9 | 123.6 | 36.2 | 96.8 | 28.4 | 14.5 | 114.6 | 33.6 | 93.2 | 27.3 | 15.9 |
| | 5500 | 2596 | 65 | 18.3 | 145.5 | 42.6 | 94.7 | 27.7 | 11.4 | 137.7 | 40.4 | 91.6 | 26.8 | 13.0 | 129.7 | 38.0 | 88.4 | 25.9 | 14.6 | 120.5 | 35.3 | 85.0 | 24.9 | 16.0 |
| | 4500 | 2124 | 61 | 16.1 | 136.3 | 40.0 | 118.1 | 34.6 | 11.2 | 127.7 | 37.4 | 114.5 | 33.6 | 12.8 | 119.1 | 34.9 | 111.0 | 32.5 | 14.4 | 110.9 | 32.5 | 107.6 | 31.5 | 15.8 |
| | 5000 | 2360 | 63 | 17.2 | 143.1 | 41.9 | 109.1 | 32.0 | 11.3 | 134.0 | 39.3 | 105.4 | 30.9 | 12.9 | 124.7 | 36.5 | 101.7 | 29.8 | 14.5 | 116.0 | 34.0 | 98.3 | 28.8 | 15.9 |
| | 5500 | 2596 | 65 | 18.3 | 147.9 | 43.4 | 99.1 | 29.0 | 11.5 | 139.9 | 41.0 | 96.0 | 28.1 | 13.1 | 130.8 | 38.4 | 92.6 | 27.1 | 14.7 | 121.5 | 35.6 | 89.1 | 26.1 | 16.0 |
| | 4500 | 2124 | 61 | 16.1 | 137.4 | 40.3 | 123.7 | 36.3 | 11.2 | 128.8 | 37.8 | 120.2 | 35.2 | 12.8 | 120.3 | 35.3 | 116.7 | 34.2 | 14.4 | 112.1 | 32.9 | 112.1 | 32.9 | 15.8 |
| | 5000 | 2360 | 63 | 17.2 | 144.3 | 42.3 | 113.9 | 33.4 | 11.4 | 134.9 | 39.5 | 110.2 | 32.3 | 12.9 | 125.7 | 36.8 | 106.6 | 31.2 | 14.5 | 117.2 | 34.3 | 103.2 | 30.3 | 15.9 |
| | 5500 | 2596 | 65 | 18.3 | 150.0 | 44.0 | 103.4 | 30.3 | 11.5 | 141.6 | 41.5 | 100.2 | 29.4 | 13.1 | 131.7 | 38.6 | 96.5 | 28.3 | 14.7 | 122.4 | 35.9 | 93.0 | 27.3 | 16.0 |
| 52048 + 52055 | 5500 | 2596 | 61 | 16.1 | 153.4 | 45.0 | 135.1 | 39.6 | 12.2 | 143.5 | 42.1 | 130.9 | 38.4 | 14.1 | 133.6 | 39.1 | 126.8 | 37.2 | 15.9 | 124.3 | 36.4 | 123.0 | 36.1 | 17.3 |
| | 6500 | 3068 | 63 | 17.2 | 159.8 | 46.8 | 124.2 | 36.4 | 12.5 | 149.3 | 43.8 | 120.0 | 35.2 | 14.2 | 139.1 | 40.8 | 115.9 | 34.0 | 16.0 | 129.4 | 37.9 | 112.0 | 32.8 | 17.3 |
| | 7500 | 3540 | 65 | 18.3 | 166.9 | 48.9 | 113.3 | 33.2 | 12.7 | 155.5 | 45.6 | 108.9 | 31.9 | 14.4 | 144.6 | 42.4 | 104.7 | 30.7 | 16.0 | 134.4 | 39.4 | 100.9 | 29.6 | 17.4 |
| | 5500 | 2596 | 61 | 16.1 | 156.5 | 45.9 | 147.7 | 43.3 | 12.3 | 146.5 | 42.9 | 143.6 | 42.1 | 14.2 | 136.5 | 40.0 | 136.5 | 40.0 | 15.9 | 127.1 | 37.2 | 127.1 | 37.2 | 17.3 |
| | 6500 | 3068 | 63 | 17.2 | 162.7 | 47.7 | 134.9 | 39.5 | 12.6 | 152.3 | 44.7 | 130.8 | 38.3 | 14.3 | 141.9 | 41.6 | 126.7 | 37.1 | 16.0 | 132.0 | 38.7 | 122.9 | 36.0 | 17.3 |
| | 7500 | 3540 | 65 | 18.3 | 169.2 | 49.6 | 122.0 | 35.7 | 12.8 | 158.0 | 46.3 | 117.8 | 34.5 | 14.5 | 147.2 | 43.1 | 113.7 | 33.3 | 16.0 | 136.9 | 40.1 | 109.9 | 32.2 | 17.4 |
| | 5500 | 2596 | 61 | 16.1 | 159.2 | 46.7 | 159.2 | 46.7 | 12.4 | 149.0 | 43.7 | 149.0 | 43.7 | 14.2 | 138.9 | 40.7 | 138.9 | 40.7 | 16.0 | 129.2 | 37.9 | 129.2 | 37.9 | 17.3 |
| | 6500 | 3068 | 63 | 17.2 | 165.3 | 48.5 | 145.3 | 42.6 | 12.7 | 154.8 | 45.4 | 141.2 | 41.4 | 14.4 | 144.1 | 42.2 | 137.3 | 40.2 | 16.0 | 134.1 | 39.3 | 133.5 | 39.1 | 17.4 |
| | 7500 | 3540 | 65 | 18.3 | 171.3 | 50.2 | 130.5 | 38.2 | 12.9 | 160.2 | 47.0 | 126.4 | 37.0 | 14.5 | 149.4 | 43.8 | 122.4 | 35.9 | 16.0 | 139.0 | 40.8 | 118.7 | 34.8 | 17.4 |
| 52063 + 52074 | 7000 | 3304 | 61 | 16.1 | 203.8 | 59.7 | 173.0 | 50.7 | 16.0 | 189.8 | 55.6 | 167.1 | 49.0 | 18.3 | 176.0 | 51.6 | 161.3 | 47.3 | 20.7 | 163.0 | 47.8 | 155.9 | 45.7 | 22.8 |
| | 8000 | 3776 | 63 | 17.2 | 214.1 | 62.8 | 160.3 | 47.0 | 16.2 | 198.8 | 58.3 | 154.0 | 45.1 | 18.6 | 184.0 | 53.9 | 148.0 | 43.4 | 20.9 | 174.0 | 51.0 | 153.3 | 44.9 | 22.8 |
| | 9000 | 4248 | 65 | 18.3 | 221.3 | 64.9 | 145.9 | 42.7 | 16.4 | 208.2 | 61.0 | 140.7 | 41.2 | 18.8 | 192.8 | 56.5 | 134.7 | 39.5 | 21.1 | 181.7 | 53.2 | 138.1 | 40.5 | 22.9 |
| | 7000 | 3304 | 61 | 16.1 | 207.1 | 60.5 | 185.0 | 54.1 | 15.9 | 192.6 | 56.4 | 179.0 | 52.5 | 18.4 | 178.8 | 52.4 | 173.3 | 50.8 | 20.8 | 168.9 | 49.5 | 168.9 | 49.5 | 22.8 |
| | 8000 | 3776 | 63 | 17.2 | 216.2 | 63.4 | 170.0 | 49.8 | 16.3 | 201.1 | 59.0 | 163.9 | 48.0 | 18.6 | 186.5 | 54.7 | 158.2 | 46.4 | 20.9 | 176.4 | 51.7 | 163.5 | 47.9 | 22.9 |
| | 9000 | 4248 | 65 | 18.3 | 226.0 | 66.2 | 154.8 | 45.4 | 16.5 | 210.6 | 61.7 | 149.0 | 43.7 | 18.9 | 194.9 | 57.1 | 143.1 | 41.9 | 21.1 | 183.7 | 53.8 | 146.4 | 42.9 | 22.9 |
| | 7000 | 3304 | 61 | 16.1 | 208.8 | 61.2 | 196.1 | 57.5 | 16.1 | 195.0 | 57.2 | 190.5 | 55.8 | 18.5 | 181.2 | 53.1 | 181.2 | 53.1 | 20.8 | 170.9 | 50.1 | 170.9 | 50.1 | 22.8 |
| | 8000 | 3776 | 63 | 17.2 | 218.1 | 63.9 | 179.5 | 52.6 | 16.3 | 203.3 | 59.6 | 173.7 | 50.9 | 18.7 | 188.9 | 55.4 | 168.1 | 49.3 | 21.0 | 178.2 | 52.2 | 173.1 | 50.7 | 22.9 |
| | 9000 | 4248 | 65 | 18.3 | 228.3 | 66.9 | 163.0 | 47.8 | 16.6 | 212.2 | 62.2 | 156.9 | 46.0 | 18.9 | 196.8 | 57.7 | 151.1 | 44.3 | 21.1 | 185.5 | 54.4 | 154.4 | 45.2 | 23.0 |
| 52070 + 52078 | 8000 | 3776 | 61 | 16.1 | 226.5 | 66.4 | 193.2 | 56.6 | 18.3 | 210.1 | 61.6 | 186.2 | 54.6 | 21.0 | 194.0 | 56.9 | 179.6 | 52.6 | 23.7 | 179.2 | 52.5 | 173.5 | 50.9 | 26.0 |
| | 9000 | 4248 | 63 | 17.2 | 236.8 | 69.4 | 178.3 | 52.3 | 18.6 | 220.1 | 64.5 | 171.6 | 50.3 | 21.3 | 202.8 | 59.4 | 164.6 | 48.2 | 24.0 | 187.2 | 54.9 | 158.4 | 46.4 | 26.2 |
| | 10000 | 4719 | 65 | 18.3 | 244.5 | 71.7 | 162.0 | 47.5 | 18.8 | 229.4 | 67.2 | 156.2 | 45.8 | 21.6 | 212.5 | 62.3 | 149.7 | 43.9 | 24.2 | 195.7 | 57.4 | 143.4 | 42.0 | 26.4 |
| | 8000 | 3776 | 61 | 16.1 | 228.6 | 67.0 | 204.3 | 59.9 | 18.4 | 212.4 | 62.2 | 197.6 | 57.9 | 21.1 | 196.4 | 57.6 | 191.1 | 56.0 | 23.8 | 181.7 | 53.2 | 181.7 | 53.2 | 26.1 |
| | 9000 | 4248 | 63 | 17.2 | 239.8 | 70.3 | 188.1 | 55.1 | 18.7 | 222.0 | 65.1 | 181.0 | 53.1 | 21.4 | 204.9 | 60.1 | 174.3 | 51.1 | 24.0 | 189.5 | 55.5 | 168.4 | 49.4 | 26.2 |
| | 10000 | 4719 | 65 | 18.3 | 248.6 | 72.9 | 170.6 | 50.0 | 19.0 | 232.5 | 68.1 | 164.6 | 48.2 | 21.7 | 214.1 | 62.8 | 157.7 | 46.2 | 24.3 | 197.7 | 57.9 | 151.5 | 44.4 | 26.4 |
| | 8000 | 3776 | 61 | 16.1 | 230.6 | 67.6 | 215.2 | 63.1 | 18.5 | 214.5 | 62.9 | 208.7 | 61.2 | 21.2 | 198.5 | 58.2 | 198.5 | 58.2 | 23.8 | 183.7 | 53.8 | 183.7 | 53.8 | 26.1 |
| | 9000 | 4248 | 63 | 17.2 | 241.2 | 70.7 | 197.2 | 57.8 | 18.8 | 223.7 | 65.6 | 190.3 | 55.8 | 21.4 | 206.8 | 60.6 | 183.8 | 53.9 | 24.1 | 191.6 | 56.1 | 178.1 | 52.2 | 26.3 |
| | 10000 | 4719 | 65 | 18.3 | 251.9 | 73.8 | 178.9 | 52.4 | 19.1 | 233.8 | 68.5 | 172.1 | 50.4 | 21.7 | 215.7 | 63.2 | 165.3 | 48.5 | 24.3 | 199.3 | 58.4 | 159.4 | 46.7 | 26.5 |
| 52075 + 52080 | 8500 | 4012 | 61 | 16.1 | 243.7 | 71.4 | 205.6 | 60.3 | 21.1 | 224.8 | 65.9 | 197.6 | 57.9 | 23.8 | 206.8 | 60.6 | 190.1 | 55.7 | 26.4 | 193.6 | 56.7 | 184.7 | 54.1 | 28.8 |
| | 9500 | 4484 | 63 | 17.2 | 252.8 | 74.1 | 189.1 | 55.4 | 21.4 | 235.9 | 69.1 | 182.3 | 53.4 | 24.2 | 216.4 | 63.4 | 174.4 | 51.1 | 26.7 | 202.4 | 59.3 | 168.9 | 49.5 | 28.9 |
| | 10200 | 4955 | 65 | 18.3 | 260.9 | 76.5 | 171.9 | 50.4 | 21.7 | 244.0 | 71.5 | 165.4 | 48.5 | 24.4 | 227.0 | 66.5 | 158.9 | 46.6 | 26.9 | - | - | - | - | - |
| | 8500 | 4012 | 61 | 16.1 | 247.2 | 71.9 | 218.2 | 63.4 | 21.2 | 226.8 | 66.5 | 208.7 | 61.2 | 23.9 | 209.0 | 61.3 | 201.4 | 59.0 | 26.5 | 195.9 | 57.4 | 195.9 | 57.4 | 28.8 |
| | 9500 | 4484 | 63 | 17.2 | 256.6 | 75.2 | 199.1 | 58.4 | 21.6 | 237.4 | 69.6 | 191.5 | 56.1 | 24.2 | 218.3 | 64.0 | 183.9 | 53.9 | 26.7 | 204.5 | 59.9 | 178.6 | 52.3 | 28.9 |
| | 10200 | 4955 | 65 | 18.3 | 264.9 | 77.6 | 180.3 | 52.9 | 21.9 | 247.7 | 72.6 | 173.9 | 51.0 | 24.6 | 228.4 | 66.9 | 166.6 | 48.8 | 27.0 | - | - | - | - | - |
| | 8500 | 4012 | 61 | 16.1 | 249.0 | 73.0 | 224.8 | 65.9 | 21.3 | 230.7 | 67.6 | 217.3 | 63.7 | 24.0 | 213.2 | 62.5 | 210.2 | 61.6 | 26.6 | 197.3 | 57.8 | 197.3 | 57.8 | 28.9 |
| | 9500 | 4484 | 63 | 17.2 | 261.0 | 76.5 | 206.7 | 60.6 | 21.7 | 241.3 | 70.7 | 198.9 | 58.3 | 24.3 | 222.5 | 65.2 | 191.6 | 56.1 | 26.8 | 205.9 | 60.3 | 185.2 | 54.3 | 29.0 |
| | 10200 | 4955 | 65 | 18.3 | 269.5 | 79.0 | 186.9 | 54.8 | 21.9 | 252.4 | 74.0 | 180.5 | 52.9 | 24.6 | 232.6 | 68.2 | 173.0 | 50.7 | 27.1 | - | - | - | - | - |

Table 16

**Notes:**

1. See Page 2 for legend.
2. Ratings are based on 75°F (23.9°C) DB evaporator air entering temperature.
3. Direct interpolation is permissible. Do not extrapolate.
4. SKM Computer Selection Software are available for quick and accurate selections.
5. Capacity is gross capacity which does not include the effect of evaporator fan motor heat.

* Power input mentioned in this page should not be used for cable or fuse selection. MCA and MFA values given in the electrical data (page 20) should be referred for the same.

## GROSS CAPACITY RATINGS - SCRR + RCA 60Hz

| Model SCRR + RCA | AFR cfm | AFR l/s | EWB | | Condenser Entering Air Temperature | | | | | | | | | | | | | | | | | | | | | |
|---|---|---|---|---|---|---|---|---|---|---|---|---|---|---|---|---|---|---|---|---|---|---|---|---|---|---|
| | | | | | 95°F (35°C) | | | | | 105°F (40.6°C) | | | | | 115°F (46.1°C) | | | | | 125°F (51.7°C) | | | | | |
| | | | | | Total Capacity | | Sensible Capacity | | PI* | Total Capacity | | Sensible Capacity | | PI* | Total Capacity | | Sensible Capacity | | PI* | Total Capacity | | Sensible Capacity | | PI* | |
| | (BPF) | | °F | °C | MBh | kW | MBh | kW | kW | MBh | kW | MBh | kW | kW | MBh | kW | MBh | kW | kW | MBh | kW | MBh | kW | kW | |
| 61018 + 61023 | 1800 | 850 | 61 | 16.1 | 55.4 | 16.2 | 43.9 | 12.9 | 4.7 | 52.4 | 15.4 | 42.6 | 12.5 | 5.3 | 48.7 | 14.3 | 41.1 | 12.0 | 6.1 | 45.0 | 13.2 | 39.6 | 11.6 | 6.7 | |
| | | | 63 | 17.2 | 57.1 | 16.7 | 40.5 | 11.9 | 4.7 | 54.1 | 15.9 | 39.2 | 11.5 | 5.4 | 50.9 | 14.9 | 37.9 | 11.1 | 6.1 | 47.5 | 13.9 | 36.6 | 10.7 | 6.7 | |
| | 0.2 | | 65 | 18.3 | 59.0 | 17.3 | 37.0 | 10.9 | 4.7 | 55.9 | 16.4 | 35.8 | 10.5 | 5.4 | 52.7 | 15.4 | 34.5 | 10.1 | 6.1 | 49.6 | 14.5 | 33.3 | 9.8 | 6.7 | |
| | 2200 | | 61 | 16.1 | 57.0 | 16.7 | 48.2 | 14.1 | 4.7 | 53.2 | 15.6 | 46.6 | 13.7 | 5.4 | 49.4 | 14.5 | 45.1 | 13.2 | 6.1 | 45.9 | 13.5 | 43.7 | 12.8 | 6.7 | |
| | 1038 | | 63 | 17.2 | 58.8 | 17.2 | 44.2 | 12.9 | 4.7 | 55.6 | 16.3 | 42.9 | 12.6 | 5.4 | 52.0 | 15.2 | 41.5 | 12.2 | 6.1 | 48.2 | 14.1 | 40.0 | 11.7 | 6.7 | |
| | 0.2 | | 65 | 18.3 | 60.7 | 17.8 | 40.1 | 11.8 | 4.7 | 57.5 | 16.9 | 38.9 | 11.4 | 5.4 | 54.2 | 15.9 | 37.7 | 11.0 | 6.1 | 50.8 | 14.9 | 36.4 | 10.7 | 6.8 | |
| | 2600 | | 61 | 16.1 | 57.5 | 16.9 | 51.9 | 15.2 | 4.7 | 53.8 | 15.8 | 50.4 | 14.8 | 5.4 | 50.1 | 14.7 | 48.9 | 14.3 | 6.1 | 46.6 | 13.7 | 46.6 | 13.7 | 6.7 | |
| | 1227 | | 63 | 17.2 | 60.0 | 17.6 | 47.6 | 14.0 | 4.7 | 56.6 | 16.6 | 46.3 | 13.6 | 5.4 | 52.5 | 15.4 | 44.7 | 13.1 | 6.1 | 48.8 | 14.3 | 43.3 | 12.7 | 6.7 | |
| | 0.3 | | 65 | 18.3 | 62.0 | 18.2 | 43.1 | 12.6 | 4.7 | 58.7 | 17.2 | 41.8 | 12.3 | 5.4 | 55.3 | 16.2 | 40.5 | 11.9 | 6.1 | 51.3 | 15.0 | 39.1 | 11.5 | 6.8 | |
| 61020 + 61028 | 2000 | | 61 | 16.1 | 65.0 | 19.0 | 52.4 | 15.3 | 5.3 | 60.6 | 17.8 | 50.4 | 14.8 | 6.0 | 56.1 | 16.4 | 48.5 | 14.2 | 6.7 | 52 | 15.2 | 47 | 13.7 | 7.4 | |
| | 944 | | 63 | 17.2 | 67.1 | 19.7 | 48.2 | 14.1 | 5.3 | 63.3 | 18.6 | 46.7 | 13.7 | 6.0 | 59.1 | 17.3 | 44.9 | 13.2 | 6.7 | 54.6 | 16.0 | 43.1 | 12.6 | 7.4 | |
| | 0.12 | | 65 | 18.3 | 69.2 | 20.3 | 44.1 | 12.9 | 5.4 | 65.5 | 19.2 | 42.6 | 12.5 | 6.1 | 61.6 | 18.1 | 41.0 | 12.0 | 6.8 | 57.5 | 16.8 | 39.4 | 11.6 | 7.4 | |
| | 2500 | | 61 | 16.1 | 66.1 | 19.4 | 58.0 | 17.0 | 5.3 | 61.8 | 18.1 | 56.2 | 16.5 | 6.0 | 57.5 | 16.9 | 54.4 | 15.9 | 6.7 | 53.4 | 15.6 | 52.7 | 15.5 | 7.4 | |
| | 1180 | | 63 | 17.2 | 69.4 | 20.4 | 53.5 | 15.7 | 5.4 | 64.8 | 19.0 | 51.7 | 15.1 | 6.0 | 60.2 | 17.6 | 49.8 | 14.6 | 6.8 | 55.8 | 16.4 | 48.1 | 14.1 | 7.4 | |
| | 0.14 | | 65 | 18.3 | 71.8 | 21.0 | 48.5 | 14.2 | 5.4 | 67.8 | 19.9 | 47.0 | 13.8 | 6.1 | 63.2 | 18.5 | 45.3 | 13.3 | 6.8 | 58.4 | 17.1 | 43.5 | 12.7 | 7.5 | |
| | 3000 | | 61 | 16.1 | 67.1 | 19.7 | 63.4 | 18.6 | 5.3 | 62.8 | 18.4 | 61.7 | 18.1 | 6.0 | 58.6 | 17.2 | 58.6 | 17.2 | 6.7 | 54.4 | 16.0 | 54.4 | 16.0 | 7.4 | |
| | 1416 | | 63 | 17.2 | 70.3 | 20.6 | 58.0 | 17.0 | 5.4 | 65.7 | 19.2 | 56.3 | 16.5 | 6.1 | 61.2 | 17.9 | 54.5 | 16.0 | 6.8 | 56.9 | 16.7 | 52.9 | 15.5 | 7.4 | |
| | 0.15 | | 65 | 18.3 | 73.5 | 21.5 | 52.7 | 15.4 | 5.4 | 68.8 | 20.2 | 50.9 | 14.9 | 6.1 | 63.9 | 18.7 | 49.1 | 14.4 | 6.8 | 59.2 | 17.4 | 47.4 | 13.9 | 7.5 | |
| 61025 + 61030 | 2600 | | 61 | 16.1 | 81.4 | 23.9 | 67.3 | 19.7 | 6.7 | 76.2 | 22.3 | 65.0 | 19.1 | 7.7 | 71.0 | 20.8 | 62.9 | 18.4 | 8.7 | 66.1 | 19.4 | 60.8 | 17.8 | 9.6 | |
| | 1227 | | 63 | 17.2 | 85.4 | 25.0 | 62.5 | 18.3 | 6.8 | 79.9 | 23.4 | 60.2 | 17.6 | 7.8 | 74.3 | 21.8 | 57.9 | 17.0 | 8.8 | 69.1 | 20.3 | 55.8 | 16.4 | 9.6 | |
| | 0.11 | | 65 | 18.3 | 88.3 | 25.9 | 57.0 | 16.7 | 6.9 | 83.4 | 24.5 | 55.1 | 16.1 | 7.9 | 78.0 | 22.9 | 52.9 | 15.5 | 8.9 | 72.4 | 21.2 | 50.8 | 14.9 | 9.7 | |
| | 3200 | | 61 | 16.1 | 83.1 | 24.4 | 74.5 | 21.8 | 6.7 | 78.0 | 22.9 | 72.4 | 21.2 | 7.7 | 72.9 | 21.4 | 70.3 | 20.6 | 8.8 | 68.0 | 19.9 | 68.0 | 19.9 | 9.6 | |
| | 1510 | | 63 | 17.2 | 87.1 | 25.5 | 68.5 | 20.1 | 6.9 | 81.5 | 23.9 | 66.3 | 19.4 | 7.9 | 76.0 | 22.3 | 64.1 | 18.8 | 8.8 | 70.9 | 20.8 | 62.2 | 18.2 | 9.7 | |
| | 0.12 | | 65 | 18.3 | 91.3 | 26.8 | 62.6 | 18.3 | 7.0 | 85.2 | 25.0 | 60.3 | 17.7 | 8.0 | 79.4 | 23.3 | 58.0 | 17.0 | 8.9 | 73.9 | 21.7 | 56.0 | 16.4 | 9.7 | |
| | 3600 | | 61 | 16.1 | 84.2 | 24.7 | 79.2 | 23.2 | 6.8 | 79.1 | 23.2 | 77.1 | 22.6 | 7.8 | 73.9 | 21.7 | 73.9 | 21.7 | 8.8 | 69.0 | 20.2 | 69.0 | 20.2 | 9.6 | |
| | 1699 | | 63 | 17.2 | 87.9 | 25.8 | 72.5 | 21.2 | 6.9 | 82.4 | 24.2 | 70.3 | 20.6 | 7.9 | 77.0 | 22.6 | 68.2 | 20.0 | 8.9 | 71.9 | 21.1 | 66.3 | 19.4 | 9.7 | |
| | 0.13 | | 65 | 18.3 | 92.0 | 27.0 | 65.8 | 19.3 | 7.1 | 86.0 | 25.2 | 63.5 | 18.6 | 8.0 | 80.2 | 23.5 | 61.3 | 18.0 | 8.9 | - | - | - | - | - | |
| 61030 + 61040 | 3200 | | 61 | 16.1 | 102.4 | 30.0 | 82.8 | 24.3 | 8.1 | 95.8 | 28.1 | 79.9 | 23.4 | 9.2 | 88.7 | 26.0 | 76.8 | 22.5 | 10.4 | 82.2 | 24.1 | 74.1 | 21.7 | 11.5 | |
| | 1510 | | 63 | 17.2 | 105.7 | 31.0 | 76.2 | 22.3 | 8.2 | 99.8 | 29.3 | 73.8 | 21.6 | 9.3 | 93.3 | 27.4 | 71.1 | 20.8 | 10.5 | 86.3 | 25.3 | 68.2 | 20.0 | 11.5 | |
| | 0.12 | | 65 | 18.3 | 109.2 | 32.0 | 69.6 | 20.4 | 8.3 | 103.2 | 30.2 | 67.2 | 19.7 | 9.4 | 96.9 | 28.4 | 64.8 | 19.0 | 10.6 | 90.9 | 26.6 | 62.4 | 18.3 | 11.6 | |
| | 3750 | | 61 | 16.1 | 104.0 | 30.5 | 89.0 | 26.1 | 8.1 | 97.0 | 28.4 | 86.1 | 25.2 | 9.3 | 90.1 | 26.4 | 83.2 | 24.4 | 10.4 | 83.7 | 24.5 | 80.6 | 23.6 | 11.5 | |
| | 1770 | | 63 | 17.2 | 108.4 | 31.8 | 82.0 | 24.0 | 8.2 | 102.0 | 29.9 | 79.4 | 23.3 | 9.4 | 94.4 | 27.7 | 76.4 | 22.4 | 10.5 | 87.6 | 25.7 | 73.7 | 21.6 | 11.6 | |
| | 0.14 | | 65 | 18.3 | 112.0 | 32.8 | 74.5 | 21.8 | 8.3 | 105.7 | 31.0 | 72.1 | 21.1 | 9.5 | 99.3 | 29.1 | 69.6 | 20.4 | 10.7 | 92.0 | 27.0 | 66.9 | 19.6 | 11.7 | |
| | 4300 | | 61 | 16.1 | 105.0 | 30.8 | 94.9 | 27.8 | 8.2 | 98.1 | 28.8 | 92.1 | 27.0 | 9.3 | 91.3 | 26.8 | 89.3 | 26.2 | 10.5 | 84.9 | 24.9 | 84.9 | 24.9 | 11.5 | |
| | 2029 | | 63 | 17.2 | 110.3 | 32.3 | 87.4 | 25.6 | 8.3 | 102.8 | 30.1 | 84.4 | 24.7 | 9.4 | 95.4 | 28.0 | 81.5 | 23.9 | 10.6 | 88.7 | 26.0 | 79.0 | 23.1 | 11.6 | |
| | 0.15 | | 65 | 18.3 | 114.1 | 33.4 | 79.1 | 23.2 | 8.4 | 107.7 | 31.6 | 76.7 | 22.5 | 9.5 | 100.1 | 29.3 | 73.8 | 21.6 | 10.7 | 92.9 | 27.2 | 71.1 | 20.8 | 11.7 | |
| 61037 + 61050 | 4000 | | 61 | 16.1 | 123.7 | 36.2 | 102.3 | 30.0 | 9.2 | 115.1 | 33.7 | 98.6 | 28.9 | 10.7 | 106.6 | 31.2 | 95.0 | 27.8 | 12.1 | 98.7 | 28.9 | 91.7 | 26.9 | 13.5 | |
| | 1888 | | 63 | 17.2 | 129.1 | 37.8 | 94.6 | 27.7 | 9.4 | 120.9 | 35.4 | 91.2 | 26.7 | 10.8 | 111.6 | 32.7 | 87.5 | 25.6 | 12.2 | 103.2 | 30.3 | 84.1 | 24.6 | 13.5 | |
| | 0.11 | | 65 | 18.3 | 133.5 | 39.1 | 86.4 | 25.3 | 9.5 | 125.7 | 36.9 | 83.3 | 24.4 | 10.9 | 117.3 | 34.4 | 80.0 | 23.4 | 12.3 | 108.3 | 31.7 | 76.5 | 22.4 | 13.5 | |
| | 4500 | | 61 | 16.1 | 124.9 | 36.6 | 108.1 | 31.7 | 9.3 | 116.6 | 34.2 | 104.6 | 30.7 | 10.7 | 108.1 | 31.7 | 101.1 | 29.6 | 12.2 | 100.2 | 29.4 | 97.9 | 28.7 | 13.5 | |
| | 2124 | | 63 | 17.2 | 131.2 | 38.5 | 99.9 | 29.3 | 9.4 | 122.0 | 35.8 | 96.2 | 28.2 | 10.8 | 113.0 | 33.1 | 92.6 | 27.1 | 12.3 | 104.7 | 30.7 | 89.3 | 26.2 | 13.5 | |
| | 0.12 | | 65 | 18.3 | 136.1 | 39.9 | 90.9 | 26.7 | 9.5 | 128.1 | 37.5 | 87.8 | 25.7 | 11.0 | 118.3 | 34.7 | 84.1 | 24.7 | 12.4 | 109.5 | 32.1 | 80.8 | 23.7 | 13.6 | |
| | 5000 | | 61 | 16.1 | 126.2 | 37.0 | 113.9 | 33.4 | 9.3 | 117.9 | 34.6 | 110.5 | 32.4 | 10.7 | 109.5 | 32.1 | 107.0 | 31.4 | 12.2 | 101.5 | 29.8 | 101.5 | 29.8 | 13.5 | |
| | 2360 | | 63 | 17.2 | 132.2 | 38.7 | 104.7 | 30.7 | 9.4 | 123.1 | 36.1 | 101.1 | 29.6 | 10.8 | 114.2 | 33.5 | 97.6 | 28.6 | 12.3 | 106.0 | 31.1 | 94.4 | 27.7 | 13.5 | |
| | 0.13 | | 65 | 18.3 | 138.2 | 40.5 | 95.4 | 28.0 | 9.6 | 128.9 | 37.8 | 91.8 | 26.9 | 11.0 | 119.3 | 35.0 | 88.2 | 25.9 | 12.4 | 110.6 | 32.4 | 84.9 | 24.9 | 13.6 | |
| 62037 + 62050 | 4000 | | 61 | 16.1 | 117.2 | 34.4 | 99.5 | 29.2 | 9.2 | 109.9 | 32.2 | 96.4 | 28.3 | 10.6 | 102.6 | 30.1 | 93.3 | 27.4 | 12.0 | 95.6 | 28.0 | 90.4 | 26.5 | 13.3 | |
| | 1888 | | 63 | 17.2 | 123.3 | 36.1 | 92.2 | 27.0 | 9.3 | 115.3 | 33.8 | 88.9 | 26.1 | 10.7 | 107.3 | 31.5 | 85.7 | 25.1 | 12.1 | 100.0 | 29.3 | 82.8 | 24.3 | 13.4 | |
| | 0.11 | | 65 | 18.3 | 127.7 | 37.4 | 84.1 | 24.6 | 9.4 | 120.9 | 35.4 | 81.4 | 23.9 | 10.8 | 112.7 | 33.0 | 78.2 | 22.9 | 12.2 | 104.7 | 30.7 | 75.2 | 22.0 | 13.4 | |
| | 4500 | | 61 | 16.1 | 118.6 | 34.8 | 105.5 | 30.9 | 9.3 | 111.4 | 32.7 | 102.5 | 30.0 | 10.6 | 104.1 | 30.5 | 99.4 | 29.1 | 12.0 | 97.1 | 28.5 | 96.6 | 28.3 | 13.3 | |
| | 2124 | | 63 | 17.2 | 124.3 | 36.4 | 97.1 | 28.5 | 9.3 | 116.5 | 34.1 | 94.0 | 27.5 | 10.7 | 108.7 | 31.9 | 90.9 | 26.6 | 12.1 | 101.5 | 29.8 | 88.1 | 25.8 | 13.4 | |
| | 0.12 | | 65 | 18.3 | 130.2 | 38.2 | 88.7 | 26.0 | 9.4 | 122.2 | 35.8 | 85.6 | 25.1 | 10.8 | 113.8 | 33.3 | 82.4 | 24.2 | 12.2 | 106.0 | 31.1 | 79.5 | 23.3 | 13.4 | |
| | 5000 | | 61 | 16.1 | 120.0 | 35.2 | 111.3 | 32.6 | 9.3 | 112.8 | 33.1 | 108.4 | 31.8 | 10.6 | 105.4 | 30.9 | 105.4 | 30.9 | 12.1 | 98.4 | 28.8 | 98.4 | 28.8 | 13.4 | |
| | 2360 | | 63 | 17.2 | 125.4 | 36.8 | 102.0 | 29.9 | 9.3 | 117.7 | 34.5 | 99.0 | 29.0 | 10.7 | 110.0 | 32.2 | 96.0 | 28.1 | 12.1 | 102.8 | 30.1 | 93.2 | 27.3 | 13.4 | |
| | 0.13 | | 65 | 18.3 | 131.5 | 38.5 | 92.8 | 27.2 | 9.4 | 123.1 | 36.1 | 89.7 | 26.3 | 10.8 | 114.8 | 33.7 | 86.5 | 25.4 | 12.2 | 107.1 | 31.4 | 83.7 | 24.5 | 13.4 | |

Table 17

**Notes:**

1. See Page 2 for legend.
2. Ratings are based on 75°F (23.9°C) DB evaporator air entering temperature.
3. Direct interpolation is permissible. Do not extrapolate.
4. SKM Computer Selection Software are available for quick and accurate selections.
5. Capacity is gross capacity which does not include the effect of evaporator fan motor heat.

* Power input mentioned in this page should not be used for cable or fuse selection. MCA and MFA values given in the electrical data (page 20) should be referred for the same.

# GROSS CAPACITY RATINGS - SCRR + RCA 60Hz

| Model SCRR + RCA | AFR cfm | AFR l/s | EWB | | Condenser Entering Air Temperature | | | | | | | | | | | | | | | | | |
|---|---|---|---|---|---|---|---|---|---|---|---|---|---|---|---|---|---|---|---|---|---|---|
| | | | | | 95°F (35°C) | | | | | 105°F (40.6°C) | | | | | 115°F (46.1°C) | | | | | 125°F (51.7°C) | | | | |
| | | | | | Total Capacity | | Sensible Capacity | | PI* | Total Capacity | | Sensible Capacity | | PI* | Total Capacity | | Sensible Capacity | | PI* | Total Capacity | | Sensible Capacity | | PI* |
| | (BPF) | | °F | °C | MBh | kW | MBh | kW | kW | MBh | kW | MBh | kW | kW | MBh | kW | MBh | kW | kW | MBh | kW | MBh | kW | kW |
| 61042 + 61055 | 4500 | | 61 | 16.1 | 138.4 | 40.6 | 113.9 | 33.4 | 10.5 | 128.4 | 37.6 | 109.6 | 32.1 | 12.1 | 118.5 | 34.7 | 105.4 | 30.9 | 13.8 | 109.2 | 32.0 | 101.6 | 29.8 | 15.3 |
| | 2124 | | 63 | 17.2 | 143.4 | 42.0 | 104.9 | 30.8 | 10.7 | 134.8 | 39.5 | 101.4 | 29.7 | 12.3 | 124.3 | 36.4 | 97.1 | 28.5 | 13.9 | 114.3 | 33.5 | 93.1 | 27.3 | 15.4 |
| | 0.12 | | 65 | 18.3 | 148.1 | 43.4 | 95.7 | 28.1 | 10.8 | 139.3 | 40.8 | 92.2 | 27.0 | 12.4 | 130.2 | 38.2 | 88.7 | 26.0 | 14.0 | 119.8 | 35.1 | 84.7 | 24.8 | 15.5 |
| | 5000 | | 61 | 16.1 | 139.4 | 40.9 | 119.5 | 35.0 | 10.6 | 129.6 | 38.0 | 115.3 | 33.8 | 12.1 | 119.8 | 35.1 | 111.3 | 32.6 | 13.8 | 110.6 | 32.4 | 107.5 | 31.5 | 15.3 |
| | 2360 | | 63 | 17.2 | 145.7 | 42.7 | 110.2 | 32.3 | 10.7 | 136.0 | 39.9 | 106.3 | 31.1 | 12.3 | 125.4 | 36.7 | 102.0 | 29.9 | 13.9 | 115.5 | 33.9 | 98.1 | 28.8 | 15.4 |
| | 0.13 | | 65 | 18.3 | 150.6 | 44.1 | 100.1 | 29.4 | 10.8 | 141.6 | 41.5 | 96.7 | 28.3 | 12.4 | 131.4 | 38.5 | 92.8 | 27.2 | 14.1 | 120.8 | 35.4 | 88.8 | 26.0 | 15.5 |
| | 5500 | | 61 | 16.1 | 140.5 | 41.2 | 125.0 | 36.6 | 10.6 | 130.7 | 38.3 | 121.0 | 35.5 | 12.2 | 121.0 | 35.5 | 117.0 | 34.3 | 13.8 | 111.8 | 32.8 | 111.8 | 32.8 | 15.3 |
| | 2596 | | 63 | 17.2 | 147.6 | 43.3 | 115.2 | 33.8 | 10.8 | 136.9 | 40.1 | 111.0 | 32.5 | 12.3 | 126.4 | 37.0 | 106.8 | 31.3 | 13.9 | 116.6 | 34.2 | 103.0 | 30.2 | 15.4 |
| | 0.14 | | 65 | 18.3 | 152.7 | 44.7 | 104.4 | 30.6 | 10.9 | 143.5 | 42.1 | 101.0 | 29.6 | 12.5 | 132.2 | 38.8 | 96.7 | 28.3 | 14.1 | 121.7 | 35.7 | 92.8 | 27.2 | 15.5 |
| 62042 + 62055 | 4500 | | 61 | 16.1 | 131.2 | 38.5 | 110.8 | 32.5 | 10.7 | 122.4 | 35.9 | 107.0 | 31.4 | 12.1 | 113.8 | 33.4 | 103.4 | 30.3 | 13.5 | 105.6 | 30.9 | 100.1 | 29.3 | 14.9 |
| | 2124 | | 63 | 17.2 | 137.2 | 40.2 | 102.4 | 30.0 | 10.8 | 128.6 | 37.7 | 98.9 | 29.0 | 12.2 | 119.3 | 35.0 | 95.1 | 27.9 | 13.6 | 110.5 | 32.4 | 91.6 | 26.9 | 14.9 |
| | 0.12 | | 65 | 18.3 | 141.8 | 41.6 | 93.2 | 27.3 | 10.8 | 134.0 | 39.3 | 90.1 | 26.4 | 12.2 | 125.4 | 36.7 | 86.8 | 25.4 | 13.7 | 115.8 | 34.0 | 83.2 | 24.4 | 15.0 |
| | 5000 | | 61 | 16.1 | 132.3 | 38.8 | 116.5 | 34.1 | 10.7 | 123.7 | 36.3 | 112.9 | 33.1 | 12.1 | 115.2 | 33.8 | 109.4 | 32.1 | 13.5 | 107.0 | 31.4 | 106.0 | 31.1 | 14.9 |
| | 2360 | | 63 | 17.2 | 139.0 | 40.7 | 107.5 | 31.5 | 10.8 | 129.6 | 38.0 | 103.7 | 30.4 | 12.2 | 120.5 | 35.3 | 100.1 | 29.3 | 13.6 | 111.8 | 32.8 | 96.7 | 28.3 | 14.9 |
| | 0.13 | | 65 | 18.3 | 144.1 | 42.2 | 97.6 | 28.6 | 10.9 | 136.1 | 39.9 | 94.6 | 27.7 | 12.3 | 126.3 | 37.0 | 90.9 | 26.6 | 13.7 | 116.9 | 34.3 | 87.3 | 25.6 | 15.0 |
| | 5500 | | 61 | 16.1 | 133.4 | 39.1 | 122.1 | 35.8 | 10.7 | 124.9 | 36.6 | 118.6 | 34.8 | 12.1 | 116.4 | 34.1 | 115.1 | 33.7 | 13.6 | 108.2 | 31.7 | 108.2 | 31.7 | 14.9 |
| | 2596 | | 63 | 17.2 | 139.8 | 41.0 | 112.1 | 32.9 | 10.8 | 130.6 | 38.3 | 108.5 | 31.8 | 12.2 | 121.6 | 35.6 | 105.0 | 30.8 | 13.6 | 113.0 | 33.1 | 101.7 | 29.8 | 14.9 |
| | 0.14 | | 65 | 18.3 | 146.1 | 42.8 | 101.9 | 29.9 | 10.9 | 136.9 | 40.1 | 98.5 | 28.9 | 12.3 | 127.1 | 37.3 | 94.8 | 27.8 | 13.7 | 117.8 | 34.5 | 91.3 | 26.8 | 15.0 |
| 62052 + 62058 | 5500 | | 61 | 16.1 | 164.8 | 48.3 | 140.0 | 41.0 | 13.6 | 154.5 | 45.3 | 135.6 | 39.7 | 15.6 | 144.2 | 42.3 | 131.3 | 38.5 | 17.6 | 134.5 | 39.4 | 127.2 | 37.3 | 19.3 |
| | 2596 | | 63 | 17.2 | 172.7 | 50.6 | 129.5 | 38.0 | 13.8 | 161.4 | 47.3 | 124.9 | 36.6 | 15.8 | 150.5 | 44.1 | 120.4 | 35.3 | 17.7 | 140.4 | 41.1 | 116.4 | 34.1 | 19.4 |
| | 0.10 | | 65 | 18.3 | 180.6 | 52.9 | 118.7 | 34.8 | 14.1 | 169.1 | 49.6 | 114.2 | 33.5 | 16.1 | 157.3 | 46.1 | 109.6 | 32.1 | 17.9 | - | - | - | - | - |
| | 6500 | | 61 | 16.1 | 168.1 | 49.3 | 152.5 | 44.7 | 13.7 | 157.8 | 46.3 | 148.2 | 43.5 | 15.7 | 147.5 | 43.2 | 144.0 | 42.2 | 17.7 | 137.6 | 40.3 | 137.6 | 40.3 | 19.4 |
| | 3068 | | 63 | 17.2 | 175.5 | 51.4 | 140.0 | 41.0 | 13.9 | 164.5 | 48.2 | 135.6 | 39.7 | 15.9 | 153.7 | 45.0 | 131.3 | 38.5 | 17.8 | 143.5 | 42.1 | 127.3 | 37.3 | 19.4 |
| | 0.11 | | 65 | 18.3 | 183.5 | 53.8 | 127.4 | 37.3 | 14.2 | 171.5 | 50.3 | 122.8 | 36.0 | 16.1 | 159.9 | 46.9 | 118.5 | 34.7 | 18.0 | - | - | - | - | - |
| | 7500 | | 61 | 16.1 | 171.1 | 50.1 | 164.7 | 48.3 | 13.8 | 160.6 | 47.1 | 160.5 | 47.0 | 15.8 | 150.2 | 44.0 | 150.2 | 44.0 | 17.7 | 140.2 | 41.1 | 140.2 | 41.1 | 19.4 |
| | 3540 | | 63 | 17.2 | 178.1 | 52.2 | 150.3 | 44.0 | 14.0 | 167.2 | 49.0 | 146.0 | 42.8 | 16.0 | 156.3 | 45.8 | 141.8 | 41.6 | 17.9 | - | - | - | - | - |
| | 0.12 | | 65 | 18.3 | 185.5 | 54.4 | 135.8 | 39.8 | 14.3 | 173.8 | 50.9 | 131.4 | 38.5 | 16.2 | 162.3 | 47.6 | 127.1 | 37.3 | 18.0 | - | - | - | - | - |
| 62064 + 62082 | 7000 | | 61 | 16.1 | 209.2 | 61.3 | 175.3 | 51.4 | 16.3 | 195.4 | 57.3 | 169.4 | 49.7 | 18.5 | 181.6 | 53.2 | 163.6 | 48.0 | 20.9 | 168.9 | 49.5 | 158.4 | 46.4 | 23.0 |
| | 3304 | | 63 | 17.2 | 219.0 | 64.2 | 162.3 | 47.6 | 16.5 | 205.0 | 60.1 | 156.5 | 45.9 | 18.8 | 190.1 | 55.7 | 150.5 | 44.1 | 21.0 | 176.6 | 51.8 | 145.1 | 42.5 | 23.1 |
| | 0.12 | | 65 | 18.3 | 226.3 | 66.3 | 147.8 | 43.3 | 16.6 | 213.6 | 62.6 | 142.8 | 41.9 | 19.0 | 199.7 | 58.5 | 137.4 | 40.3 | 21.3 | 185.1 | 54.3 | 131.9 | 38.6 | 23.3 |
| | 8000 | | 61 | 16.1 | 211.7 | 62.1 | 186.9 | 54.8 | 16.3 | 198.1 | 58.1 | 181.3 | 53.1 | 18.6 | 184.5 | 54.1 | 175.7 | 51.5 | 20.9 | 171.8 | 50.3 | 170.5 | 50.0 | 23.0 |
| | 3776 | | 63 | 17.2 | 222.1 | 65.1 | 172.4 | 50.5 | 16.6 | 207.2 | 60.7 | 166.4 | 48.8 | 18.8 | 192.7 | 56.5 | 160.6 | 47.1 | 21.1 | 179.4 | 52.6 | 155.4 | 45.5 | 23.2 |
| | 0.13 | | 65 | 18.3 | 231.1 | 67.7 | 156.8 | 46.0 | 16.8 | 217.2 | 63.7 | 151.5 | 44.4 | 19.1 | 201.6 | 59.1 | 145.6 | 42.7 | 21.3 | 187.4 | 54.9 | 140.3 | 41.1 | 23.4 |
| | 9000 | | 61 | 16.1 | 214.1 | 62.7 | 198.3 | 58.1 | 16.4 | 200.6 | 58.8 | 192.8 | 56.5 | 18.6 | 186.9 | 54.8 | 186.9 | 54.8 | 21.0 | 174.1 | 51.0 | 174.1 | 51.0 | 23.1 |
| | 4248 | | 63 | 17.2 | 223.9 | 65.6 | 181.8 | 53.3 | 16.6 | 209.3 | 61.3 | 176.0 | 51.6 | 18.9 | 194.9 | 57.1 | 170.5 | 50.0 | 21.2 | 181.8 | 53.3 | 165.5 | 48.5 | 23.2 |
| | 0.14 | | 65 | 18.3 | 234.6 | 68.8 | 165.4 | 48.5 | 16.8 | 218.8 | 64.1 | 159.4 | 46.7 | 19.1 | 203.4 | 59.6 | 153.6 | 45.0 | 21.4 | 189.5 | 55.5 | 148.5 | 43.5 | 23.4 |
| 62073 + 62086 | 8000 | | 61 | 16.1 | 240.1 | 70.4 | 199.0 | 58.3 | 19.2 | 222.6 | 65.2 | 191.5 | 56.1 | 22.1 | 205.6 | 60.3 | 184.4 | 54.0 | 25.0 | 190.3 | 55.8 | 178.0 | 52.2 | 27.4 |
| | 3776 | | 63 | 17.2 | 248.4 | 72.8 | 183.1 | 53.7 | 19.4 | 233.5 | 68.4 | 177.0 | 51.9 | 22.3 | 215.8 | 63.2 | 169.8 | 49.8 | 25.2 | 199.4 | 58.4 | 163.2 | 47.8 | 27.5 |
| | 0.13 | | 65 | 18.3 | 256.5 | 75.2 | 166.8 | 48.9 | 19.6 | 241.4 | 70.7 | 160.8 | 47.1 | 22.6 | 226.0 | 66.2 | 154.8 | 45.4 | 25.4 | 209.6 | 61.4 | 148.7 | 43.6 | 27.6 |
| | 9000 | | 61 | 16.1 | 241.9 | 70.9 | 209.9 | 61.5 | 19.2 | 224.8 | 65.9 | 202.8 | 59.4 | 22.1 | 208.1 | 61.0 | 195.9 | 57.4 | 25.0 | 192.9 | 56.5 | 189.7 | 55.6 | 27.5 |
| | 4248 | | 63 | 17.2 | 252.8 | 74.1 | 193.4 | 56.7 | 19.5 | 235.9 | 69.1 | 186.6 | 54.7 | 22.4 | 217.8 | 63.8 | 179.4 | 52.6 | 25.2 | 201.7 | 59.1 | 173.1 | 50.7 | 27.6 |
| | 0.14 | | 65 | 18.3 | 261.1 | 76.5 | 175.5 | 51.4 | 19.7 | 245.6 | 72.0 | 169.5 | 49.7 | 22.7 | 228.6 | 67.0 | 163.1 | 47.8 | 25.4 | 211.5 | 62.0 | 156.7 | 45.9 | 27.6 |
| | 10000 | | 61 | 16.1 | 243.7 | 71.4 | 220.6 | 64.7 | 19.3 | 226.8 | 66.5 | 213.7 | 62.6 | 22.2 | 210.2 | 61.6 | 207.0 | 60.7 | 25.1 | 195.0 | 57.2 | 195.0 | 57.2 | 27.5 |
| | 4719 | | 63 | 17.2 | 255.9 | 75.0 | 203.0 | 59.5 | 19.6 | 237.4 | 69.6 | 195.7 | 57.4 | 22.4 | 219.6 | 64.4 | 188.7 | 55.3 | 25.3 | 203.8 | 59.7 | 182.7 | 53.5 | 27.6 |
| | 0.15 | | 65 | 18.3 | 264.8 | 77.6 | 183.8 | 53.9 | 19.8 | 248.9 | 73.0 | 177.8 | 52.1 | 22.8 | 230.0 | 67.4 | 170.7 | 50.0 | 25.5 | 213.2 | 62.5 | 164.4 | 48.2 | 27.6 |
| 62080 + 62088 | 8500 | | 61 | 16.1 | 259.7 | 76.1 | 212.5 | 62.3 | 22.7 | 241.4 | 70.7 | 204.6 | 60.0 | 26.0 | 221.9 | 65.0 | 196.4 | 57.6 | 29.1 | 204.2 | 59.9 | 189.1 | 55.4 | 31.8 |
| | 4012 | | 63 | 17.2 | 267.7 | 78.5 | 195.3 | 57.2 | 23.0 | 251.0 | 73.6 | 188.4 | 55.2 | 26.3 | 233.1 | 68.3 | 181.2 | 53.1 | 29.4 | 214.1 | 62.7 | 173.5 | 50.9 | 32.0 |
| | 0.13 | | 65 | 18.3 | 276.2 | 80.9 | 178.0 | 52.2 | 23.2 | 259.2 | 76.0 | 171.3 | 50.2 | 26.5 | 242.0 | 70.9 | 164.6 | 48.2 | 29.7 | - | - | - | - | - |
| | 9500 | | 61 | 16.1 | 263.3 | 77.2 | 223.9 | 65.6 | 22.8 | 243.2 | 71.3 | 215.4 | 63.1 | 26.0 | 224.0 | 65.7 | 207.5 | 60.8 | 29.2 | 206.6 | 60.6 | 200.4 | 58.7 | 31.9 |
| | 4484 | | 63 | 17.2 | 272.0 | 79.7 | 205.4 | 60.2 | 23.1 | 254.9 | 74.7 | 198.4 | 58.2 | 26.4 | 234.8 | 68.8 | 190.4 | 55.8 | 29.5 | 216.1 | 63.3 | 183.1 | 53.7 | 32.0 |
| | 0.14 | | 65 | 18.3 | 280.7 | 82.3 | 186.5 | 54.7 | 23.4 | 263.3 | 77.2 | 179.7 | 52.7 | 26.7 | 245.7 | 72.0 | 173.1 | 50.7 | 29.8 | - | - | - | - | - |
| | 10200 | | 61 | 16.1 | 264.3 | 77.5 | 231.1 | 67.7 | 22.9 | 244.4 | 71.6 | 222.9 | 65.3 | 26.1 | 225.4 | 66.1 | 215.1 | 63.0 | 29.2 | 208.0 | 61.0 | 208.0 | 61.0 | 31.9 |
| | 4955 | | 63 | 17.2 | 274.5 | 80.5 | 212.1 | 62.2 | 23.2 | 256.5 | 75.2 | 204.9 | 60.0 | 26.5 | 235.8 | 69.1 | 196.7 | 57.7 | 29.5 | 217.4 | 63.7 | 189.6 | 55.6 | 32.1 |
| | 0.15 | | 65 | 18.3 | 283.3 | 83.0 | 192.1 | 56.3 | 23.5 | 265.6 | 77.8 | 185.4 | 54.3 | 26.8 | 247.4 | 72.5 | 178.6 | 52.3 | 29.9 | - | - | - | - | - |

Table 18

**Notes:**

1. See Page 2 for legend.
2. Ratings are based on 75°F (23.9°C) DB evaporator air entering temperature.
3. Direct interpolation is permissible. Do not extrapolate.
4. SKM Computer Selection Software are available for quick and accurate selections.
5. Capacity is gross capacity which does not include the effect of evaporator fan motor heat.

* Power input mentioned in this page should not be used for cable or fuse selection. MCA and MFA values given in the electrical data (page 20) should be referred for the same.

## FAN PERFORMACE - SCRR

| Model SCRR | AirFlowRate | | External Static Pressure - in.wg (Pa) | | | | | |
|---|---|---|---|---|---|---|---|---|
| | | | 0 (0) | | 0.2 (50) | | 0.4 (100) | |
| | cfm | l/s | RPM | kW | RPM | kW | RPM | kW |
| 51017 / 61018 | 1800 | 850 | 1482 | 0.38 | 1549 | 0.43 | 1615 | 0.45 |
| | 2200 | 1038 | 1745 | 0.57 | 1800 | 0.63 | 1854 | 0.69 |
| | 2600 | 1227 | 2031 | 0.83 | 2071 | 0.89 | 2177 | 0.97 |
| 51020 / 61020 | 2000 | 944 | 1614 | 0.47 | 1671 | 0.52 | 1730 | 0.58 |
| | 2500 | 1180 | 1955 | 0.75 | 2001 | 0.82 | 2049 | 0.89 |
| | 3000 | 1416 | 2311 | 1.19 | 2350 | 1.28 | 2390 | 1.36 |
| 51024 / 61025 | 2600 | 1227 | 1917 | 0.67 | 1956 | 0.73 | 2001 | 0.79 |
| | 3200 | 1510 | 2312 | 1.10 | 2342 | 1.17 | 2377 | 1.25 |
| | 3600 | 1699 | 2572 | 1.53 | 2609 | 1.63 | 2639 | 1.72 |
| 51030 / 61030 | 3200 | 1510 | 1292 | 0.73 | 1330 | 0.80 | 1378 | 0.90 |
| | 3750 | 1770 | 1472 | 1.03 | 1510 | 1.13 | 1551 | 1.25 |
| | 4300 | 2029 | 1669 | 1.48 | 1700 | 1.59 | 1736 | 1.72 |
| 51036 / 61037 | 4000 | 1888 | 1460 | 0.93 | 1508 | 1.07 | 1545 | 1.17 |
| | 4500 | 2124 | 1636 | 1.29 | 1664 | 1.40 | 1687 | 1.48 |
| | 5000 | 2360 | 1794 | 1.68 | 1826 | 1.82 | 1888 | 2.11 |
| 52036 / 62037 | 4000 | 1888 | 1460 | 0.93 | 1508 | 1.07 | 1545 | 1.17 |
| | 4500 | 2124 | 1636 | 1.29 | 1664 | 1.40 | 1687 | 1.48 |
| | 5000 | 2360 | 1794 | 1.68 | 1826 | 1.82 | 1888 | 2.11 |
| 51042 / 61042 | 4500 | 2124 | 1636 | 1.29 | 1664 | 1.40 | 1687 | 1.48 |
| | 5000 | 2360 | 1794 | 1.68 | 1826 | 1.82 | 1888 | 2.11 |
| | 5500 | 2596 | 1938 | 2.12 | 1952 | 2.21 | - | - |
| 52042 / 62042 | 4500 | 2124 | 1636 | 1.29 | 1664 | 1.40 | 1687 | 1.48 |
| | 5000 | 2360 | 1794 | 1.68 | 1826 | 1.82 | 1888 | 2.11 |
| | 5500 | 2596 | 1938 | 2.12 | 1952 | 2.21 | - | - |
| 52048 / 62052 | 5500 | 2596 | 1984 | 1.44 | 2031 | 1.58 | 2075 | 1.70 |
| | 6500 | 3068 | 2307 | 2.14 | 2348 | 2.32 | 2383 | 2.48 |
| | 7500 | 3540 | 2647 | 3.28 | 2673 | 3.42 | 2680 | 3.50 |
| 52063 / 62064 | 7000 | 3304 | 1340 | 1.54 | 1386 | 1.76 | 1430 | 1.96 |
| | 8000 | 3776 | 1517 | 2.18 | 1545 | 2.34 | 1584 | 2.58 |
| | 9000 | 4248 | 1669 | 2.82 | 1710 | 3.12 | 1744 | 3.38 |
| 52070 / 62073 | 8000 | 3776 | 1517 | 2.18 | 1545 | 2.34 | 1584 | 2.58 |
| | 9000 | 4248 | 1669 | 2.82 | 1710 | 3.12 | 1744 | 3.38 |
| | 10000 | 4719 | 1855 | 3.90 | 1880 | 4.14 | 1911 | 4.42 |
| 52075 / 62080 | 8500 | 4012 | 1584 | 2.42 | 1627 | 2.72 | 1663 | 2.96 |
| | 9500 | 4484 | 1770 | 3.40 | 1794 | 3.60 | 1827 | 3.88 |
| | 10300 | 4861 | 1896 | 4.14 | 1931 | 4.46 | - | - |

Table 19

## FAN PERFORMACE - SCRW

| Model SCRW | AirFlowRate | | External Static Pressure - in.wg (Pa) | | | | | |
|---|---|---|---|---|---|---|---|---|
| | | | 0 (0) | | 0.2 (50) | | 0.4 (100) | |
| | cfm | l/s | RPM | kW | RPM | kW | RPM | kW |
| 51016 / 61016 | 1800 | 850 | 1450 | 0.35 | 1509 | 0.40 | 1576 | 0.46 |
| | 2200 | 1038 | 1718 | 0.51 | 1767 | 0.59 | 1821 | 0.65 |
| | 2600 | 1227 | 1985 | 0.77 | 2040 | 0.85 | 2087 | 0.92 |
| 51021 / 61021 | 2000 | 944 | 1644 | 0.50 | 1692 | 0.54 | 1751 | 0.60 |
| | 2500 | 1180 | 1979 | 0.79 | 2036 | 0.87 | 2084 | 0.94 |
| | 3000 | 1416 | 2351 | 1.28 | 2399 | 1.38 | 2439 | 1.48 |
| 51024 / 61024 | 2800 | 1321 | 2015 | 0.74 | 2058 | 0.81 | 2100 | 0.88 |
| | 3200 | 1510 | 2277 | 1.03 | 2319 | 1.12 | 2355 | 1.20 |
| | 3600 | 1699 | 2555 | 1.48 | 2587 | 1.57 | 2635 | 1.71 |
| 51028 / 61028 | 2800 | 1321 | 2056 | 0.81 | 2094 | 0.87 | 2135 | 0.94 |
| | 3200 | 1510 | 2312 | 1.10 | 2359 | 1.21 | 2394 | 1.29 |
| | 3600 | 1699 | 2602 | 1.61 | 2627 | 1.68 | 2695 | 1.77 |
| 51036 / 61036 | 3600 | 1699 | 1316 | 0.70 | 1358 | 0.79 | 1402 | 0.89 |
| | 4500 | 2124 | 1611 | 1.21 | 1645 | 1.33 | 1678 | 1.45 |
| | 5000 | 2360 | 1779 | 1.62 | 1807 | 1.74 | 1839 | 1.88 |
| 51047 / 61047 | 4000 | 1888 | 1479 | 0.99 | 1517 | 1.09 | 1555 | 1.20 |
| | 4600 | 2171 | 1682 | 1.42 | 1714 | 1.54 | 1748 | 1.67 |
| | 5200 | 2454 | 1885 | 1.99 | 1912 | 2.12 | 1941 | 2.26 |
| 51050 / 61050 | 5500 | 2596 | 1965 | 1.38 | 2005 | 1.50 | 2048 | 1.62 |
| | 6500 | 3068 | 2290 | 2.06 | 2326 | 2.22 | 2360 | 2.38 |
| | 7000 | 3304 | 2463 | 2.58 | 2490 | 2.74 | 2522 | 2.90 |
| 51058 / 61058 | 7000 | 3304 | 1324 | 1.22 | 1360 | 1.64 | 1404 | 1.84 |
| | 8000 | 3776 | 1479 | 1.98 | 1522 | 2.22 | 1556 | 2.44 |
| | 9000 | 4248 | 1653 | 2.70 | 1690 | 2.98 | 1717 | 3.18 |
| 51080 / 61080 | 8000 | 3776 | 1536 | 2.30 | 1567 | 1.24 | 1602 | 2.70 |
| | 9000 | 4248 | 1703 | 3.08 | 1737 | 3.34 | 1771 | 3.60 |
| | 10000 | 4719 | 1885 | 4.18 | 1912 | 4.40 | - | - |
| 51100 / 61100 | 10000 | 4719 | 1348 | 2.46 | 1742 | 2.76 | 1885 | 3.90 |
| | 11000 | 5191 | 1471 | 3.15 | 1507 | 3.42 | 1548 | 3.75 |
| | 12000 | 5663 | 1593 | 1.32 | 1625 | 4.26 | 1663 | 4.62 |

Table 20

## ELECTRICAL DATA - SCRR & RCA

*Power Supply: 380~415V/3PH/50Hz*

| Model SCRR | Unit Characteristic | | Indoor Unit | | | | | | | | | Outdoor Unit | | | |
|---|---|---|---|---|---|---|---|---|---|---|---|---|---|---|---|
| | | | Compressor | | | Evaporator Fan Motor | | Heater | | Humidifier | | Model RCA | Condenser Fan Motor | | |
| | MFA | MCA | QTY | RLA | LRA | QTY | FLA | kW | FLA | kW | FLA | | Qty | FLA | LRA |
| 51017 | 50 | 36 | 1 | 12 | 74 | 1 | 3.3 | 6.0 | 9.9 | 3.75 | 5.4 | 51022 | 1 | 2.3 | 5.5 |
| 51020 | 63 | 38 | 1 | 14 | 101 | 1 | 3.3 | 6.0 | 9.9 | 3.75 | 5.4 | 51026 | 1 | 2.3 | 5.5 |
| 51024 | 63 | 41 | 1 | 16 | 95 | 1 | 3.3 | 6.0 | 9.9 | 3.75 | 5.4 | 51028 | 1 | 2.3 | 5.5 |
| 51030 | 80 | 49 | 1 | 20 | 118 | 1 | 3.7 | 6.0 | 9.9 | 3.75 | 5.4 | 51037 | 2 | 2.3 | 5.5 |
| 51036 | 80 | 55 | 1 | 21 | 118 | 1 | 3.7 | 7.5 | 12.4 | 6.0 | 8.7 | 51046 | 2 | 2.3 | 5.5 |
| 52036 | 80 | 56 | 2 | 12 | 74 | 1 | 3.7 | 7.5 | 12.4 | 6.0 | 8.7 | 52046 | 2 | 2.3 | 5.5 |
| 51042 | 100 | 61 | 1 | 25 | 140 | 1 | 3.7 | 7.5 | 12.4 | 6.0 | 8.7 | 51052 | 2 | 2.3 | 5.5 |
| 52042 | 80 | 60 | 2 | 14 | 101 | 1 | 3.7 | 7.5 | 12.4 | 6.0 | 8.7 | 52052 | 2 | 2.3 | 5.5 |
| 52048 | 100 | 76 | 2 | 16 | 95 | 2 | 3.3 | 10.5 | 17.4 | 7.5 | 10.8 | 52055 | 2 | 2.3 | 5.5 |
| 52063 | 125 | 88 | 2 | 20 | 118 | 2 | 3.7 | 10.5 | 17.4 | 7.5 | 10.8 | 52074 | 3 | 2.3 | 5.5 |
| 52070 | 125 | 102 | 2 | 21 | 118 | 2 | 3.7 | 15.0 | 24.9 | 11.25 | 16.2 | 52078 | 3 | 2.3 | 5.5 |
| 52075 | 160 | 112 | 2 | 25 | 140 | 2 | 3.7 | 15.0 | 24.9 | 11.25 | 16.2 | 52080 | 3 | 2.3 | 5.5 |

**Table 21**

*Power Supply: 380~400V/3PH/60Hz*

| Model SCRR | Unit Characteristic | | Indoor Unit | | | | | | | | | Outdoor Unit | | | |
|---|---|---|---|---|---|---|---|---|---|---|---|---|---|---|---|
| | | | Compressor | | | Evaporator Fan Motor | | Heater | | Humidifier | | Model RCA | Condenser Fan Motor | | |
| | MFA | MCA | QTY | RLA | LRA | QTY | FLA | kW | FLA | kW | FLA | | Qty | FLA | LRA |
| 61018 | 50 | 34 | 1 | 10 | 94 | 1 | 3.3 | 6.0 | 9.9 | 3.75 | 5.4 | 61023 | 1 | 2.9 | 4.6 |
| 61020 | 50 | 37 | 1 | 12 | 88 | 1 | 3.3 | 6.0 | 9.9 | 3.75 | 5.4 | 61028 | 1 | 2.9 | 4.6 |
| 61025 | 63 | 41 | 1 | 16 | 94 | 1 | 3.3 | 6.0 | 9.9 | 3.75 | 5.4 | 61030 | 1 | 2.9 | 4.6 |
| 61030 | 80 | 52 | 1 | 21 | 140 | 1 | 3.7 | 6.0 | 9.9 | 3.75 | 5.4 | 61040 | 2 | 2.9 | 4.6 |
| 61037 | 100 | 64 | 1 | 26 | 145 | 1 | 3.7 | 7.5 | 12.4 | 6.0 | 8.7 | 61050 | 2 | 2.9 | 4.6 |
| 62037 | 80 | 53 | 2 | 10 | 94 | 1 | 3.7 | 7.5 | 12.4 | 6.0 | 8.7 | 62050 | 2 | 2.9 | 4.6 |
| 61042 | 100 | 64 | 1 | 26 | 145 | 1 | 3.7 | 7.5 | 12.4 | 6.0 | 8.7 | 61055 | 2 | 2.9 | 4.6 |
| 62042 | 80 | 58 | 2 | 12 | 88 | 1 | 3.7 | 7.5 | 12.4 | 6.0 | 8.7 | 62055 | 2 | 2.9 | 4.6 |
| 62052 | 100 | 75 | 2 | 16 | 94 | 2 | 3.3 | 10.5 | 17.4 | 7.5 | 10.8 | 62058 | 2 | 2.9 | 4.6 |
| 62064 | 125 | 92 | 2 | 21 | 140 | 2 | 3.7 | 10.5 | 17.4 | 7.5 | 10.8 | 62082 | 3 | 2.9 | 4.6 |
| 62073 | 160 | 117 | 2 | 26 | 145 | 2 | 3.7 | 15.0 | 24.9 | 11.25 | 16.2 | 62086 | 3 | 2.9 | 4.6 |
| 62080 | 160 | 117 | 2 | 26 | 145 | 2 | 3.7 | 15.0 | 24.9 | 11.25 | 16.2 | 62088 | 3 | 2.9 | 4.6 |

**Table 22**

### Legend

**MFA** Maximum Fuse Amps (for fuse/circuit breaker sizing), complies with NEC Article 440-22 & 430-52.
**MCA** Minimum Circuit Amps.(for wire sizing), complies with NEC article 440-33.
**RLA** Rated Load Amps. (at worst operating condition)
**LRA** Locked Rotor Amps
**FLA** Full Load Amps

**Note :**
Voltage imbalance not to exceed ± 2 % of the rated voltage

## ELECTRICAL DATA - SCRW

*Power Supply: 380~400V/3PH/60Hz and 380~415V/3PH/50Hz*

| Model SCRW | Unit Characteristic | | Supply Fan Motor | | Heater | | Humidifier | |
|---|---|---|---|---|---|---|---|---|
| | MFA | MCA | QTY | FLA | kW | FLA | kW | FLA |
| 51016 / 61016 | 32 | 21 | 1 | 3.3 | 6.0 | 9.9 | 3.75 | 5.4 |
| 51021 / 61021 | 32 | 21 | 1 | 3.3 | 6.0 | 9.9 | 3.75 | 5.4 |
| 51024 / 61024 | 32 | 21 | 1 | 3.3 | 6.0 | 9.9 | 3.75 | 5.4 |
| 51028 / 61028 | 32 | 21 | 1 | 3.3 | 6.0 | 9.9 | 3.75 | 5.4 |
| 51036 / 61036 | 50 | 28 | 1 | 3.7 | 7.5 | 12.4 | 6.0 | 8.7 |
| 51047 / 61047 | 50 | 28 | 1 | 3.7 | 7.5 | 12.4 | 6.0 | 8.7 |
| 51050 / 61050 | 63 | 39 | 2 | 3.3 | 10.5 | 17.4 | 7.5 | 10.8 |
| 51058 / 61058 | 80 | 55 | 2 | 3.7 | 15.0 | 24.9 | 11.25 | 16.2 |
| 51080 / 61080 | 80 | 55 | 2 | 3.7 | 15.0 | 24.9 | 11.25 | 16.2 |
| 51100 / 61100 | 100 | 58 | 3 | 3.7 | 15.0 | 24.9 | 11.25 | 16.2 |

**Table 23**

### Legend

**MFA** Maximum Fuse Amps (for fuse/circuit breaker sizing), complies with NEC Article 440-22 & 430-52.

**MCA** Minimum Circuit Amps.(for wire sizing), complies with NEC article 440-33.

**FLA** Full Load Amps

**Note :**
Voltage imbalance not to exceed ± 2 % of the rated voltage

## Typical Wiring Diagram - SCRR + RCA
### (Single Circuit)**

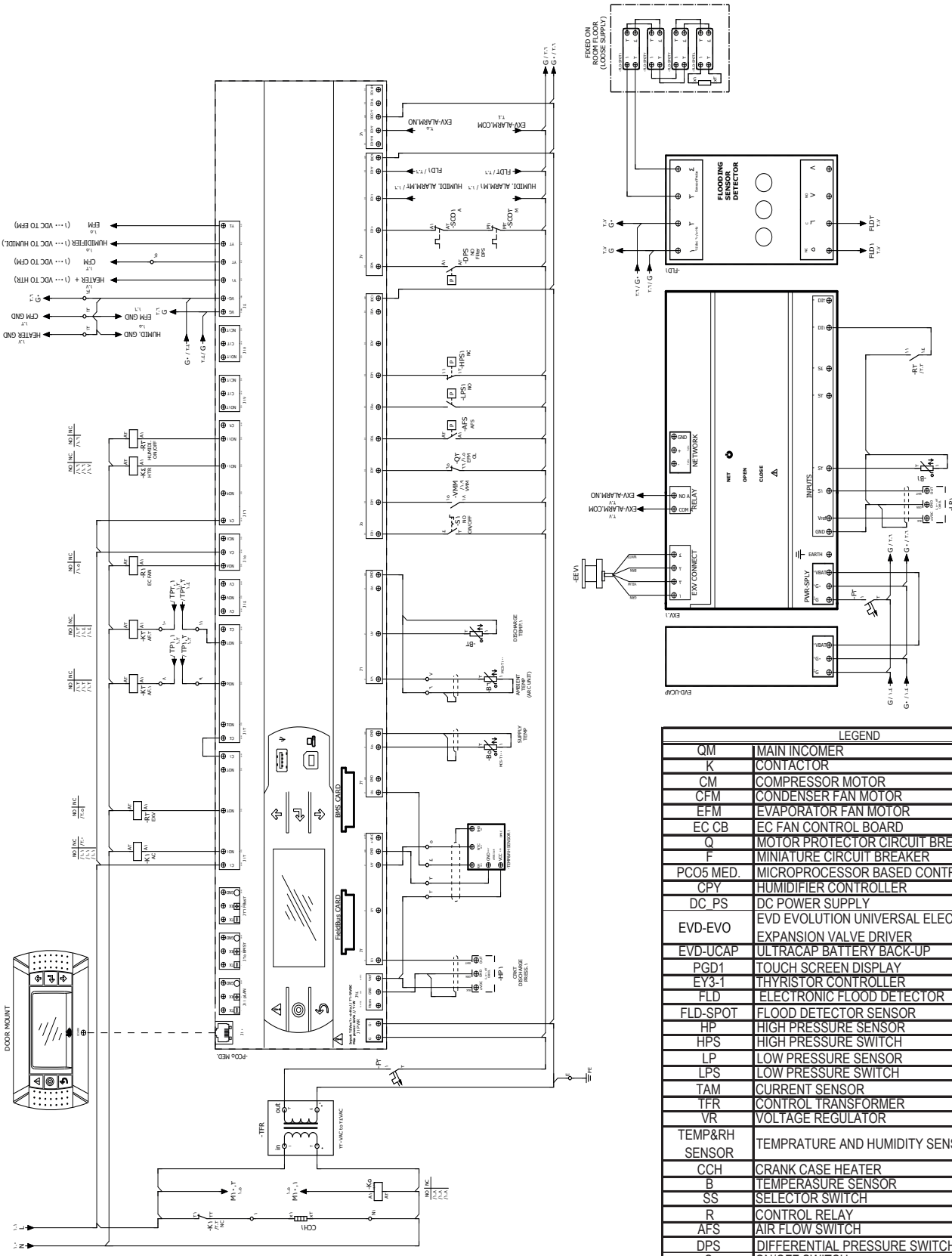

| LEGEND | |
|---|---|
| QM | MAIN INCOMER |
| K | CONTACTOR |
| CM | COMPRESSOR MOTOR |
| CFM | CONDENSER FAN MOTOR |
| EFM | EVAPORATOR FAN MOTOR |
| EC CB | EC FAN CONTROL BOARD |
| Q | MOTOR PROTECTOR CIRCUIT BREAKER |
| F | MINIATURE CIRCUIT BREAKER |
| PCO5 MED. | MICROPROCESSOR BASED CONTROLLER |
| CPY | HUMIDIFIER CONTROLLER |
| DC_PS | DC POWER SUPPLY |
| EVD-EVO | EVD EVOLUTION UNIVERSAL ELECTRINIC EXPANSION VALVE DRIVER |
| EVD-UCAP | ULTRACAP BATTERY BACK-UP |
| PGD1 | TOUCH SCREEN DISPLAY |
| EY3-1 | THYRISTOR CONTROLLER |
| FLD | ELECTRONIC FLOOD DETECTOR |
| FLD-SPOT | FLOOD DETECTOR SENSOR |
| HP | HIGH PRESSURE SENSOR |
| HPS | HIGH PRESSURE SWITCH |
| LP | LOW PRESSURE SENSOR |
| LPS | LOW PRESSURE SWITCH |
| TAM | CURRENT SENSOR |
| TFR | CONTROL TRANSFORMER |
| VR | VOLTAGE REGULATOR |
| TEMP&RH SENSOR | TEMPRATURE AND HUMIDITY SENSOR |
| CCH | CRANK CASE HEATER |
| B | TEMPERASURE SENSOR |
| SS | SELECTOR SWITCH |
| R | CONTROL RELAY |
| AFS | AIR FLOW SWITCH |
| DPS | DIFFERENTIAL PRESSURE SWITCH |
| S | ON/OFF SWITCH |
| SCO | SAFETY CUTOUT |
| X2 | CONTROL TERMINALS |
| XF | POWER CIRCUIT FUSE |
| VMM | VOLTAGE MONITORING MODULE |
| EEV | ELECTRONIC EXPANSION VALVE |

** Note: Wiring diagram is for reference only, for exact wiring diagram consult SKM.

# Typical Wiring Diagram - SCRR + RCA
## (Single Circuit)**

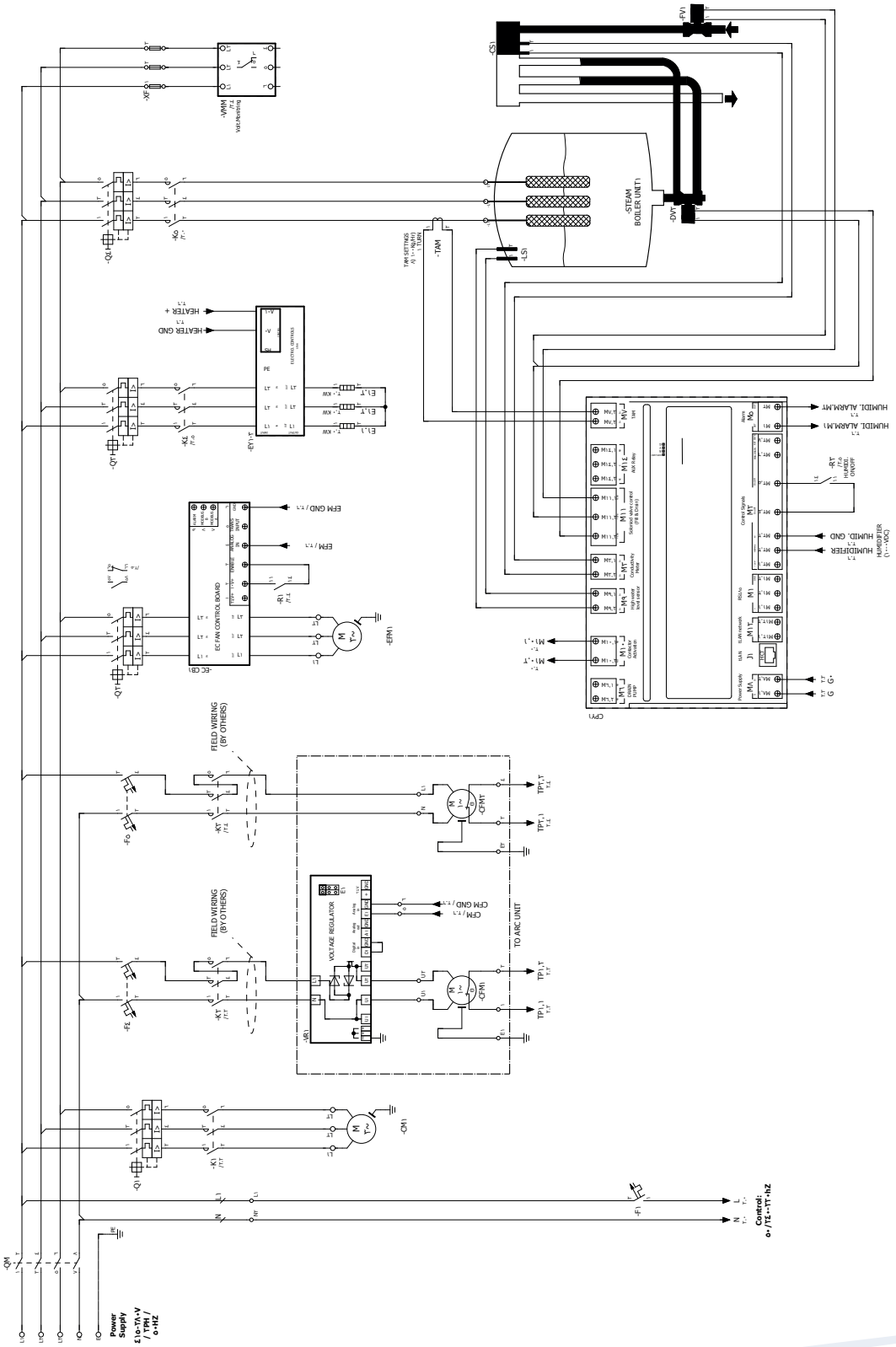


** Note: Wiring diagram is for reference only, for exact wiring diagram consult SKM.

## Typical Wiring Diagram - SCRR + RCA

### (Two Circuit)**

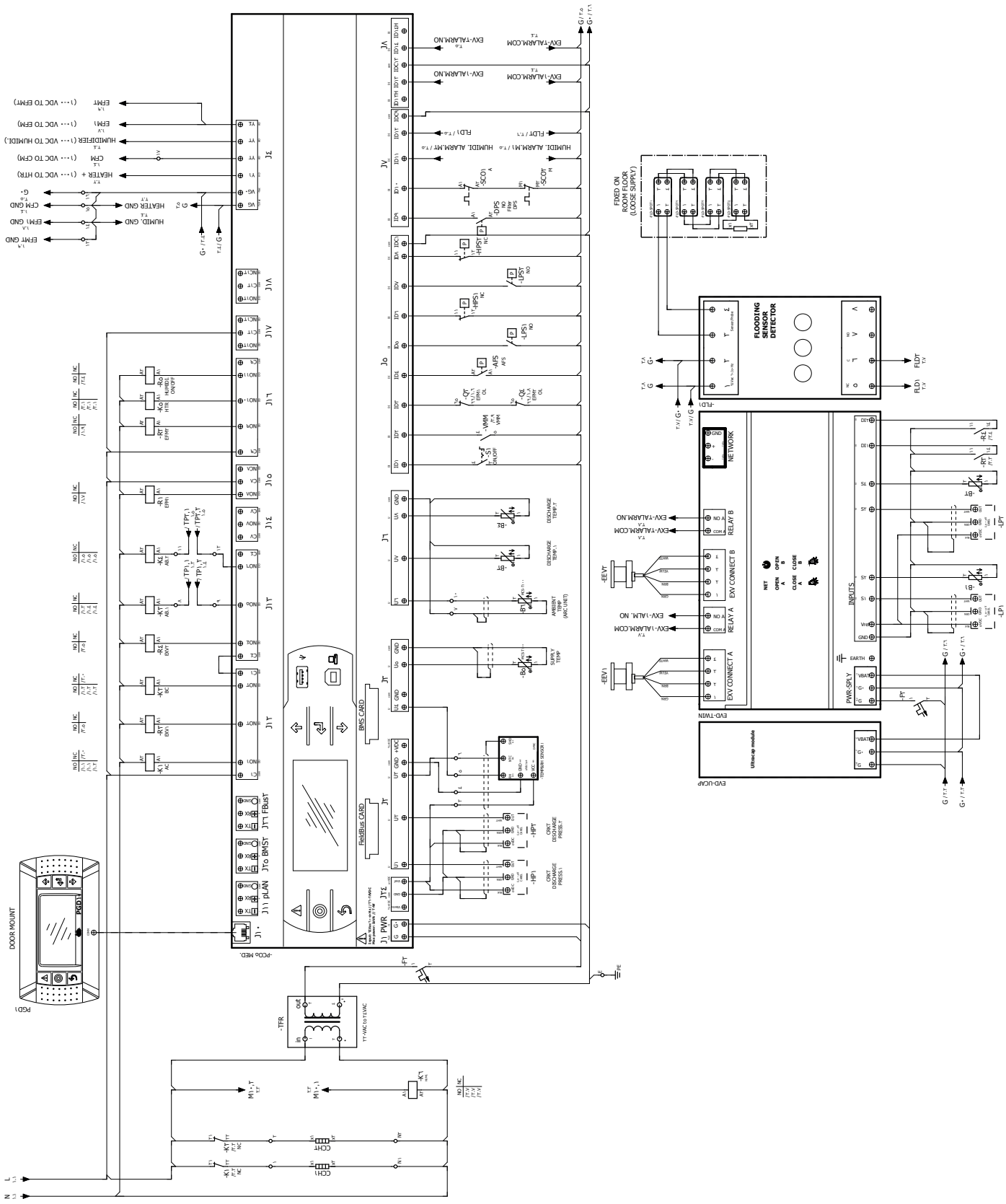

** Note: Wiring diagram is for reference only, for exact wiring diagram consult SKM.

# Typical Wiring Diagram - SCRR + RCA

## (Two Circuit)**

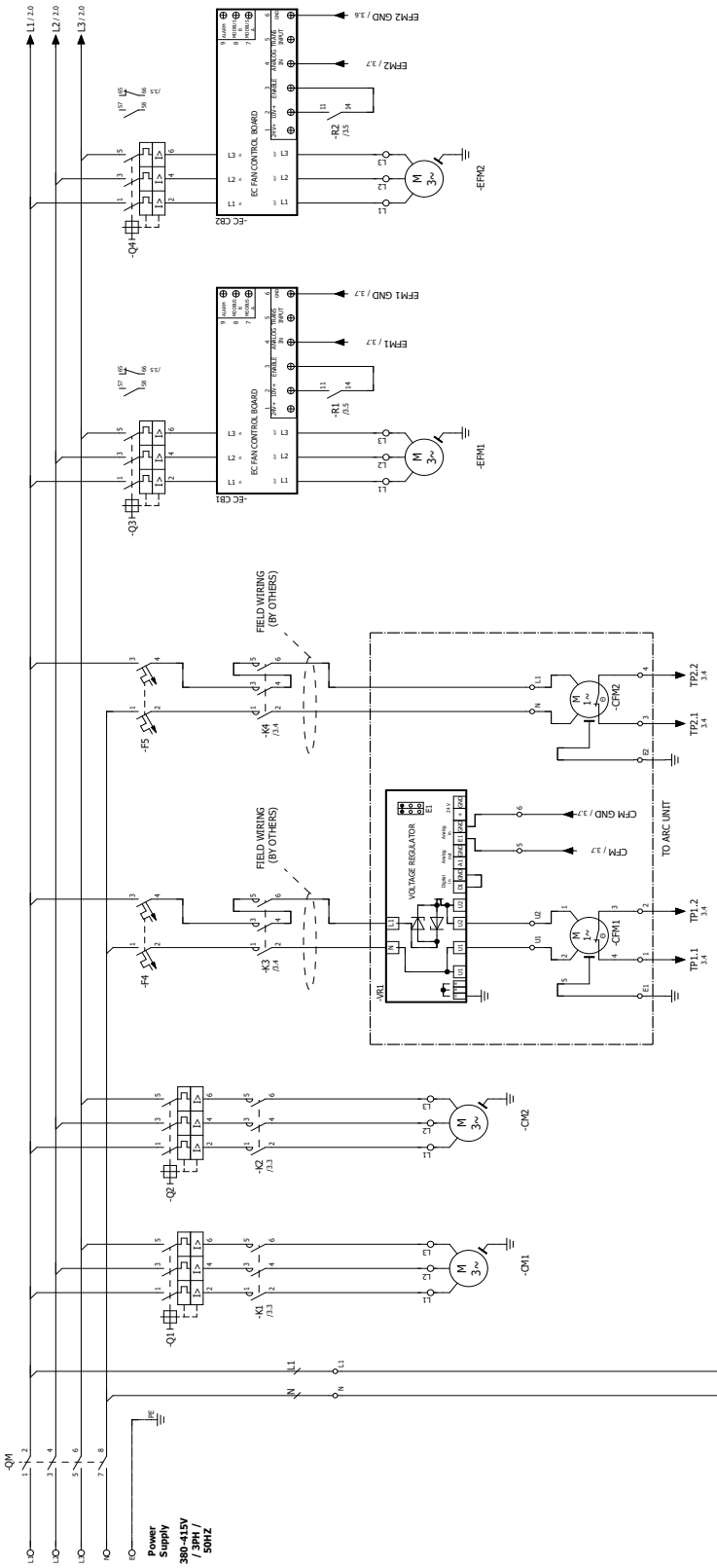


| LEGEND | |
|---|---|
| QM | MAIN INCOMER |
| K | CONTACTOR |
| CM | COMPRESSOR MOTOR |
| CFM | CONDENSER FAN MOTOR |
| EFM | EVAPORATOR FAN MOTOR |
| EC CB | EC FAN CONTROL BOARD |
| Q | MOTOR PROTECTOR CIRCUIT BREAKER |
| F | MINIATURE CIRCUIT BREAKER |
| PCO5 MED. | MICROPROCESSOR BASED CONTROLLER |
| CPY | HUMIDIFIER CONTROLLER |
| DC_PS | DC POWER SUPPLY |
| EVD-EVO | EVD EVOLUTION UNIVERSAL ELECTRINIC EXPANSION VALVE DRIVER |
| EVD-UCAP | ULTRACAP BATTERY BACK-UP |
| PGD1 | TOUCH SCREEN DISPLAY |
| EY3-1 | THYRISTOR CONTROLLER |
| FLD | ELECTRONIC FLOOD DETECTOR |
| FLD-SPOT | FLOOD DETECTOR SENSOR |
| HP | HIGH PRESSURE SENSOR |
| HPS | HIGH PRESSURE SWITCH |
| LP | LOW PRESSURE SENSOR |
| LPS | LOW PRESSURE SWITCH |
| TAM | CURRENT SENSOR |
| TFR | CONTROL TRANSFORMER |
| VR | VOLTAGE REGULATOR |
| TEMP&RH SENSOR | TEMPRATURE AND HUMIDITY SENSOR |
| CCH | CRANK CASE HEATER |
| B | TEMPERASURE SENSOR |
| SS | SELECTOR SWITCH |
| R | CONTROL RELAY |
| AFS | AIR FLOW SWITCH |
| DPS | DIFFERENTIAL PRESSURE SWITCH |
| S | ON/OFF SWITCH |
| SCO | SAFETY CUTOUT |
| X2 | CONTROL TERMINALS |
| XF | POWER CIRCUIT FUSE |
| VMM | VOLTAGE MONITORING MODULE |
| EEV | ELECTRONIC EXPANSION VALVE |

** Note: Wiring diagram is for reference only, for exact wiring diagram consult SKM.

## Typical Wiring Diagram - SCRR + RCA

### (Two Circuit)**

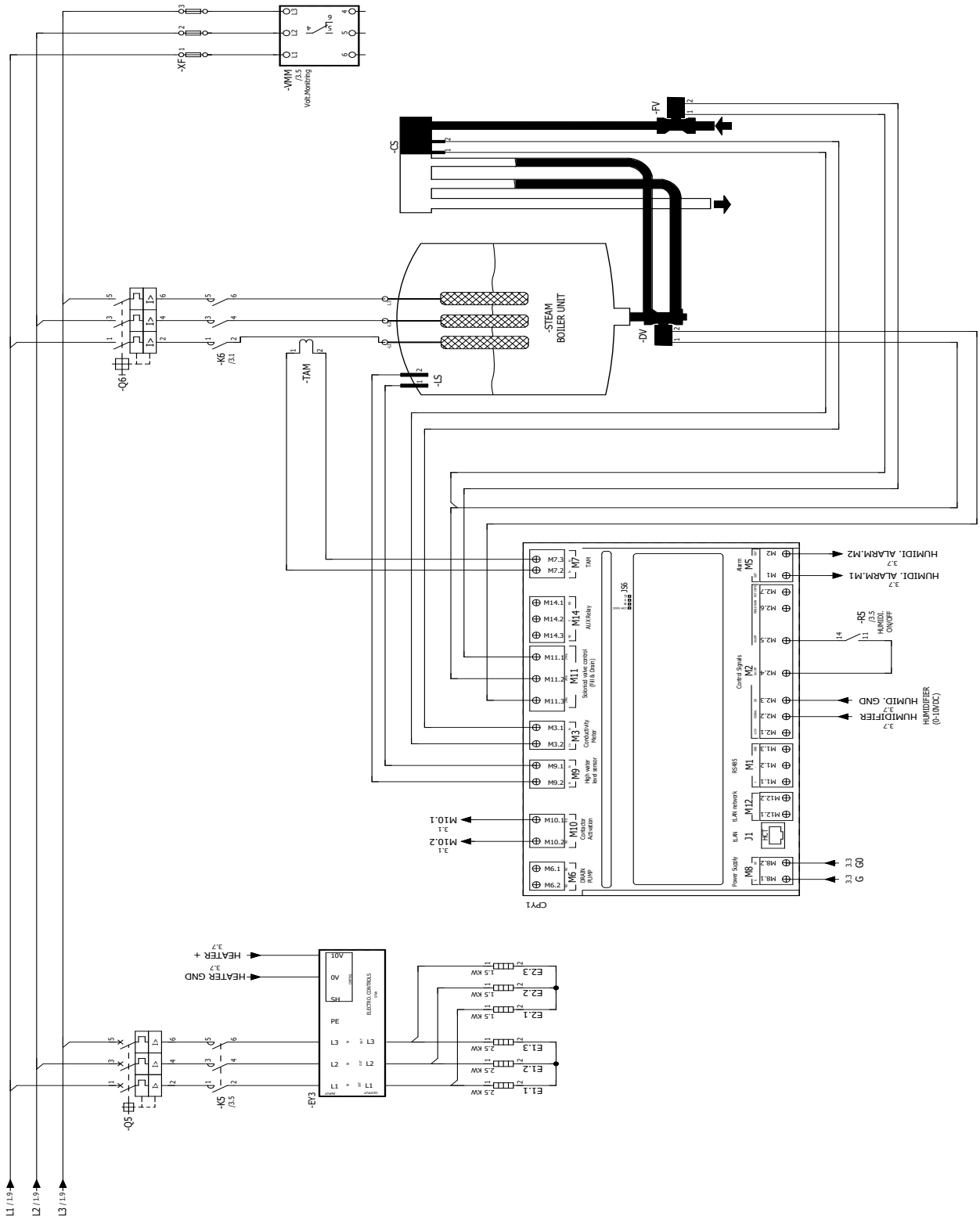


** Note: Wiring diagram is for reference only, for exact wiring diagram consult SKM.

## Typical Wiring Diagram - SCRW

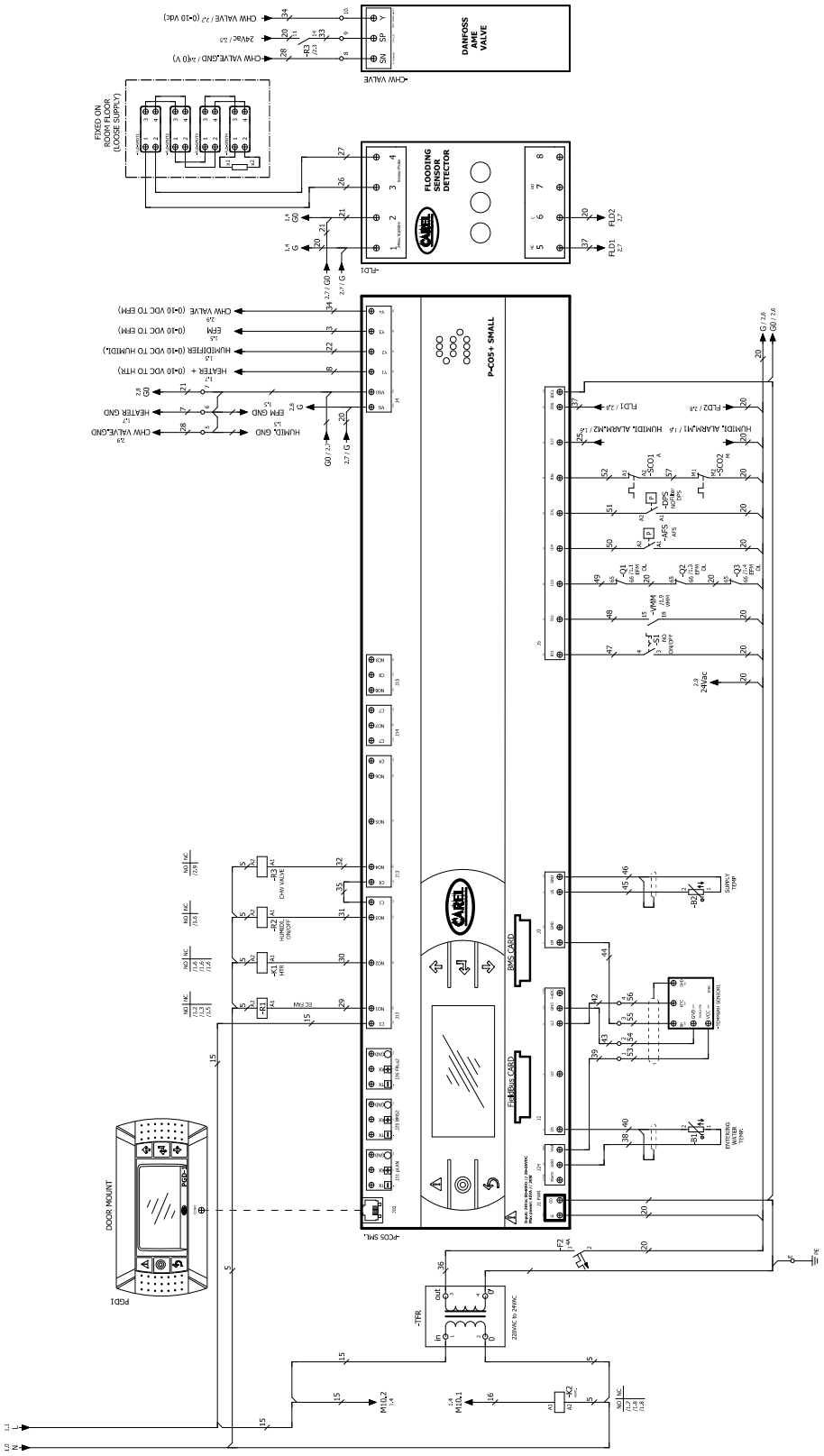


** Note: Wiring diagram is for reference only, for exact wiring diagram consult SKM.

## Typical Wiring Diagram - SCRW

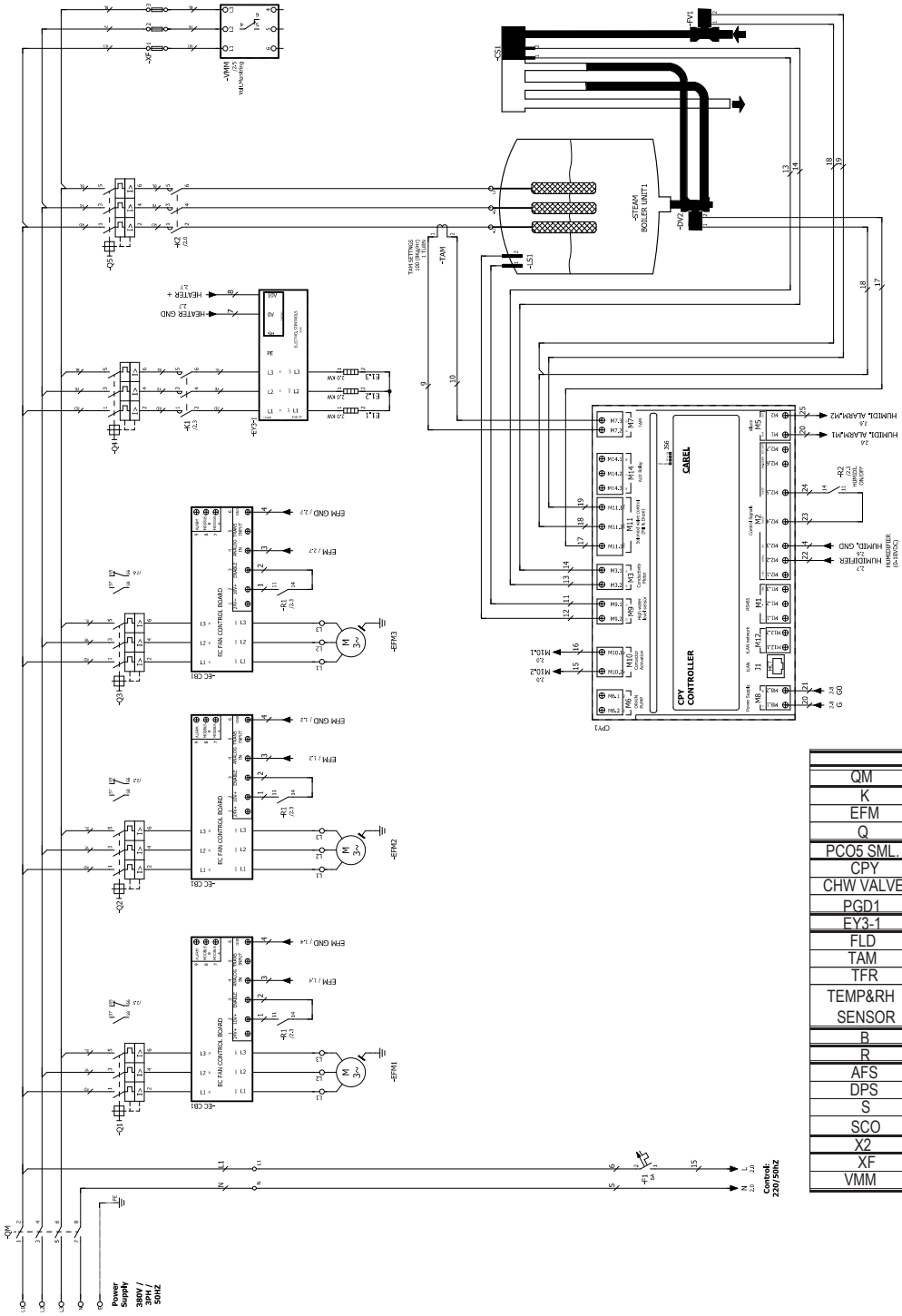


| LEGEND | |
|---|---|
| QM | MAIN INCOMER |
| K | CONTACTOR |
| EFM | EVAPORATOR FAN MOTOR |
| Q | MOTOR PROTECTOR CIRCUIT BREAKER |
| PCO5 SML. | MICROPROCESSOR BASED CONTROLLER |
| CPY | HUMIDIFIER CONTROLLER |
| CHW VALVE | CHILLED WATER VALVE |
| PGD1 | TOUCH SCREEN DISPLAY |
| EY3-1 | THYRISTOR CONTROLLER |
| FLD | ELECTRONIC FLOOD DETECTOR |
| TAM | CURRENT SENSOR |
| TFR | CONTROL TRANSFORMER |
| TEMP&RH SENSOR | TEMPRATURE AND HUMIDITY SENSOR |
| B | TEMPERASURE SENSOR |
| R | CONTROL RELAY |
| AFS | AIR FLOW SWITCH |
| DPS | DIFFERENTIAL PRESSURE SWITCH |
| S | ON/OFF SWITCH |
| SCO | SAFETY CUTOUT |
| X2 | CONTROL TERMINALS |
| XF | POWER CIRCUIT FUSE |
| VMM | VOLTAGE MONITORING MODULE |

** Note: Wiring diagram is for reference only, for exact wiring diagram consult SKM.

# Dimensional Data - Outdoor Unit

## RCA Models : 51022 to 51028 & 61023 to 61030

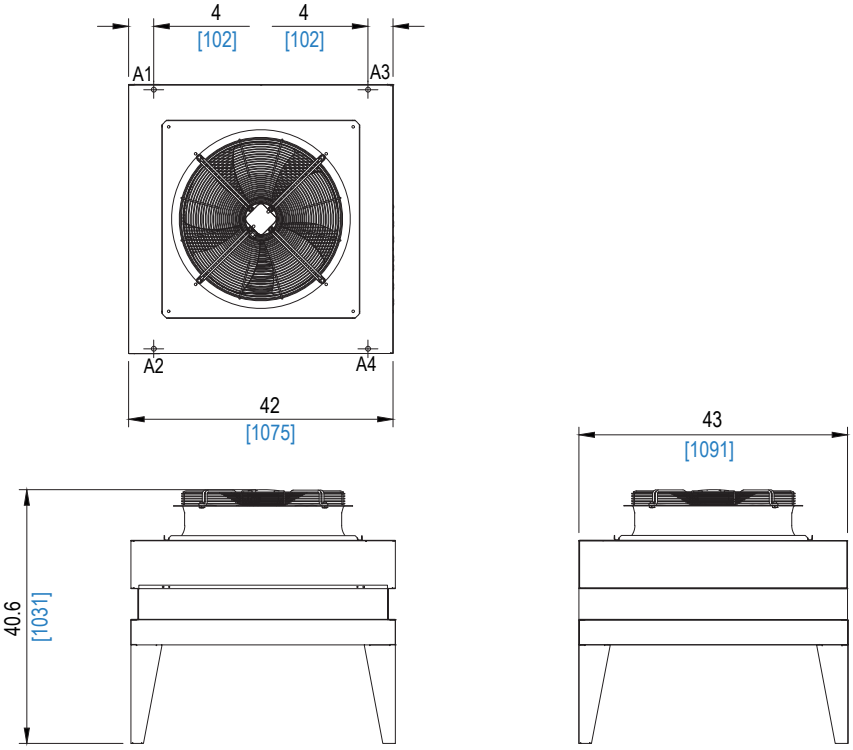


## RCA Models : 51037 to 52055 & 61040 to 62058

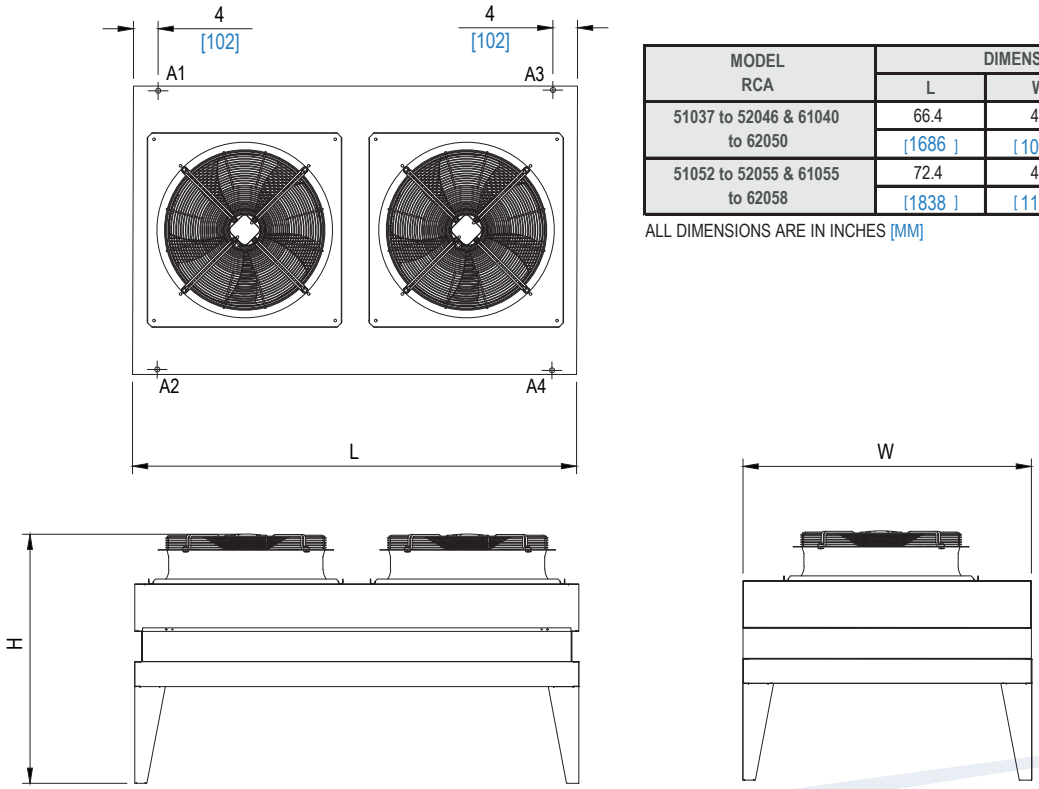


| MODEL RCA | DIMENSIONS | | |
|---|---|---|---|
| | L | W | H |
| 51037 to 52046 & 61040 to 62050 | 66.4 | 43 | 40.6 |
| | [1686 ] | [1091 ] | [ 1031 ] |
| 51052 to 52055 & 61055 to 62058 | 72.4 | 47 | 40.6 |
| | [1838 ] | [1193 ] | [ 1031 ] |

ALL DIMENSIONS ARE IN INCHES [MM]

**Table 24**

## Dimensional Data - Outdoor Unit

### RCA Models : 52074 to 52080 & 62082 to 62088

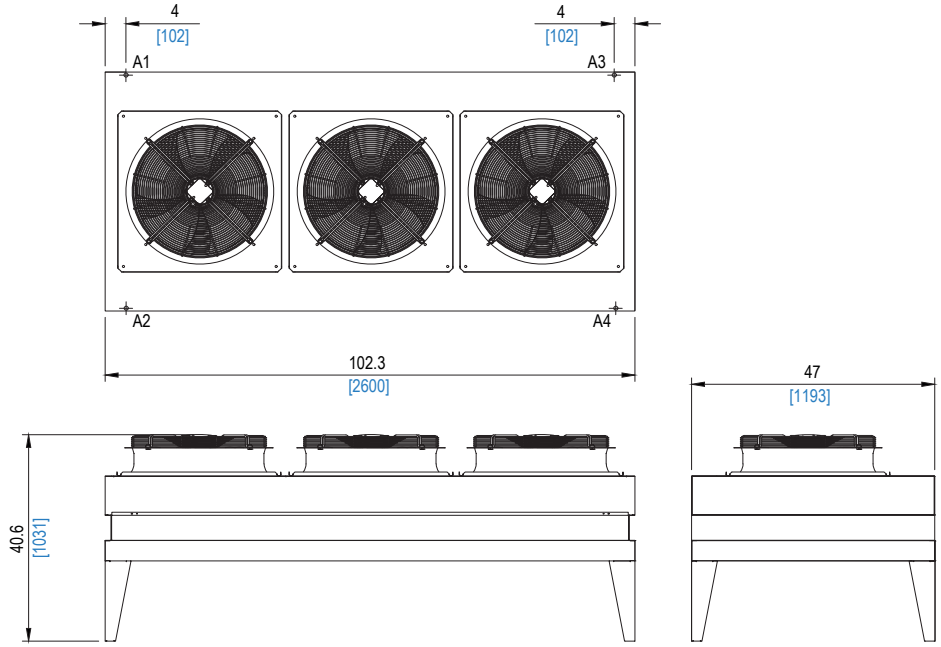


## Dimensional Data - Indoor Unit

### SCRR Models: 51017 to 51030 & 61018 to 61030
### SCRW Models: 51016 to 51028 & 61016 to 61028

| MODEL SCRW | MODEL SCRR | DIMENSIONS | | |
|---|---|---|---|---|
| | | L | W | H |
| 51016 to 51021 & 61016 to 61021 | 51017 to 51020 & 61018 to 61020 | 33.2 [842] | 35 [890] | 78 [1980] |
| 51024 to 51028 & 61024 to 61028 | 51024 to 51030 & 61025 to 61030 | 43.2 [1096] | 35 [890] | 78 [1980] |

ALL DIMENSIONS ARE IN INCHES [MM]

**Table 25**

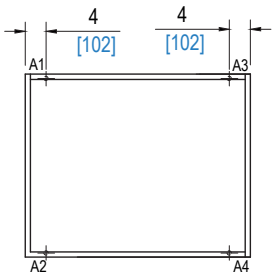


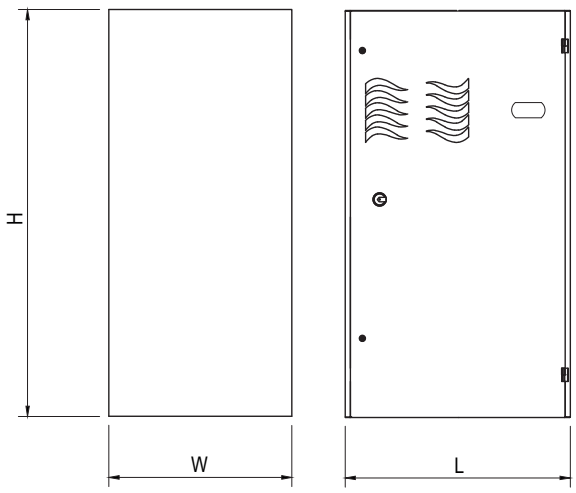

# Dimensional Data - Outdoor Unit

## SCRR Models: 51036 to 52042 & 61037 to 62042
## SCRW Models: 51036 to 51047 & 61036 to 61047

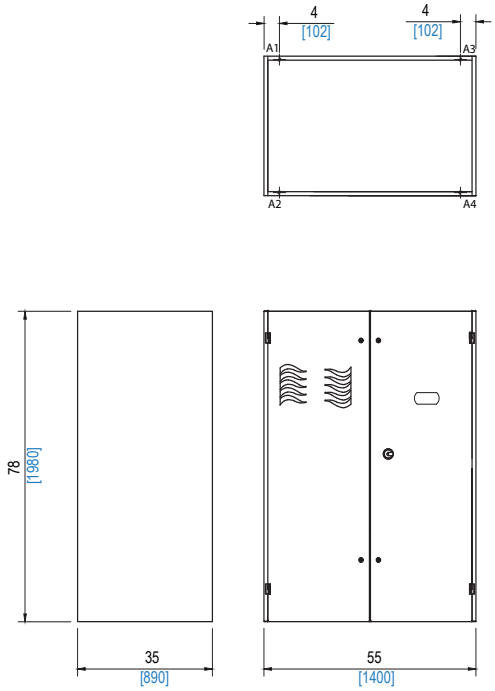


## SCRR Models: 52048 to 52075 & 62052 to 62080
## SCRW Models: 51050 to 51100 & 61050 to 61100

| MODEL SCRW | MODEL SCRR | DIMENSIONS | | |
|---|---|---|---|---|
| | | L | W | H |
| 51050 to 51080 & 61050 to 61080 | 52048 to 52075 & 62052 to 62080 | 83 [2108] | 35 [890] | 78 [1980] |
| 51100 & 61100 | - | 98.4 [2500] | 35 [890] | 78 [1980] |

ALL DIMENSIONS ARE IN INCHES [MM]

**Table 26**

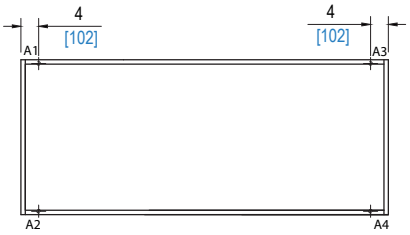


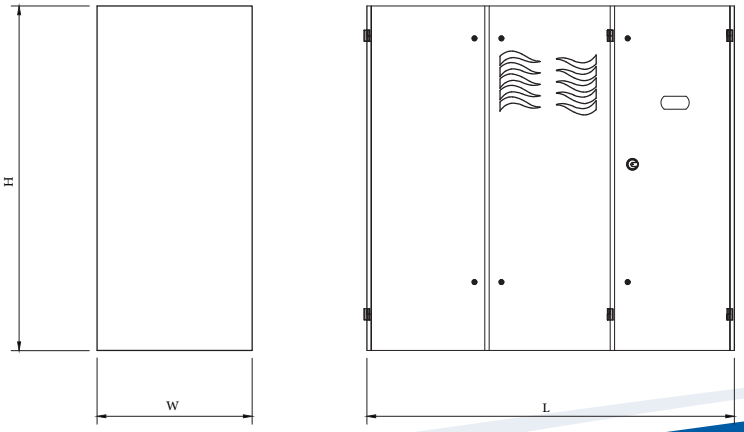

## Chilled Water Piping Schematic

### Two-way Motorized Valve (Standard)

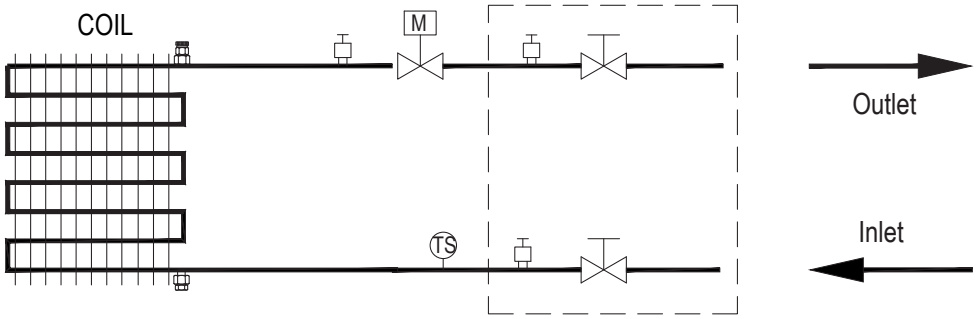


### Three-way Motorized Valve (Optional)

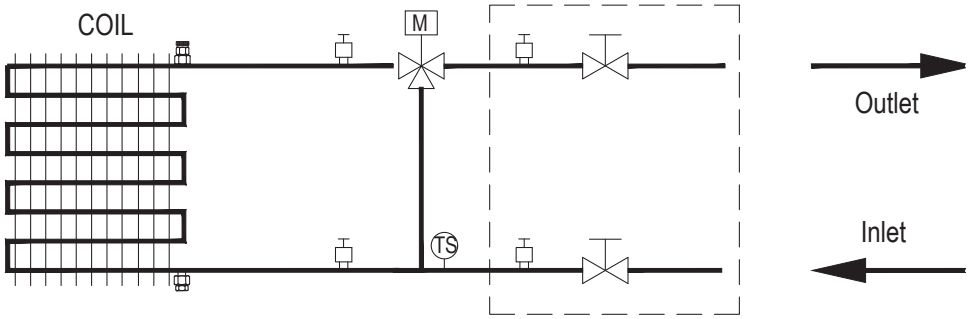


### Pressure Independent Control Valves - PICV (Optional)

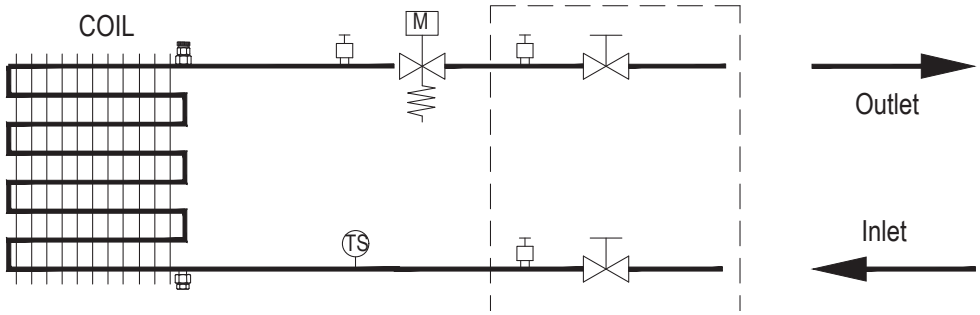


### Legend:

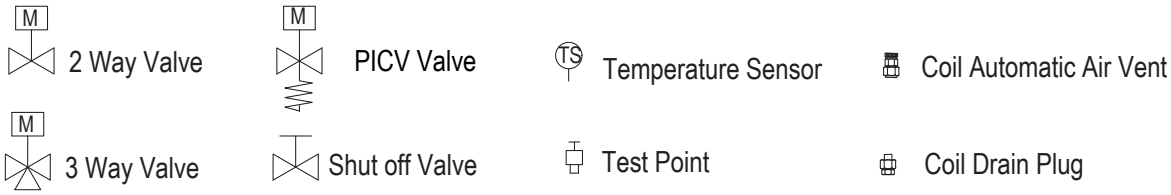


- - - - Not Supplied by SKM, but these components to be field supplied and assembled for proper unit operation and maintenance.

## Weights and Loading Points

| RCA | UNIT | LOADING POINTS | | | | Total Weight |
|---|---|---|---|---|---|---|
| | | A1 | A2 | A3 | A4 | |
| 51022 / 61023 | lb. | 54 | 54 | 54 | 54 | 217 |
| | kg. | 25 | 25 | 25 | 25 | 98 |
| 51026 / 61028 | lb. | 60 | 60 | 60 | 60 | 240 |
| | kg. | 27 | 27 | 27 | 27 | 109 |
| 51028 / 61030 | lb. | 61 | 61 | 61 | 61 | 243 |
| | kg. | 28 | 28 | 28 | 28 | 110 |
| 51037 / 61040 | lb. | 94 | 94 | 94 | 94 | 374 |
| | kg. | 42 | 42 | 42 | 42 | 170 |
| 51046 / 61050 | lb. | 97 | 97 | 97 | 97 | 388 |
| | kg. | 44 | 44 | 44 | 44 | 176 |
| 52046 / 62050 | lb. | 97 | 97 | 97 | 97 | 388 |
| | kg. | 44 | 44 | 44 | 44 | 176 |
| 51052 / 61055 | lb. | 108 | 108 | 108 | 108 | 431 |
| | kg. | 49 | 49 | 49 | 49 | 196 |
| 52052 / 62055 | lb. | 109 | 109 | 109 | 109 | 437 |
| | kg. | 49 | 49 | 50 | 50 | 198 |
| 52055 / 62058 | lb. | 110 | 110 | 110 | 110 | 440 |
| | kg. | 50 | 50 | 50 | 50 | 200 |
| 52074 / 62082 | lb. | 152 | 152 | 153 | 153 | 610 |
| | kg. | 69 | 69 | 69 | 69 | 277 |
| 52078 / 62086 | lb. | 154 | 154 | 154 | 154 | 615 |
| | kg. | 70 | 70 | 70 | 70 | 279 |
| 52080 / 62088 | lb. | 154 | 154 | 154 | 154 | 615 |
| | kg. | 70 | 70 | 70 | 70 | 279 |

**Table 27**

| RCA | UNIT | LOADING POINTS | | | | Total Weight |
|---|---|---|---|---|---|---|
| | | A1 | A2 | A3 | A4 | |
| 51022 / 61023 | lb. | 54 | 54 | 54 | 54 | 217 |
| | kg. | 25 | 25 | 25 | 25 | 98 |
| 51026 / 61028 | lb. | 60 | 60 | 60 | 60 | 240 |
| | kg. | 27 | 27 | 27 | 27 | 109 |
| 51028 / 61030 | lb. | 61 | 61 | 61 | 61 | 243 |
| | kg. | 28 | 28 | 28 | 28 | 110 |
| 51037 / 61040 | lb. | 94 | 94 | 94 | 94 | 374 |
| | kg. | 42 | 42 | 42 | 42 | 170 |
| 51046 / 61050 | lb. | 97 | 97 | 97 | 97 | 388 |
| | kg. | 44 | 44 | 44 | 44 | 176 |
| 52046 / 62050 | lb. | 97 | 97 | 97 | 97 | 388 |
| | kg. | 44 | 44 | 44 | 44 | 176 |
| 51052 / 61055 | lb. | 108 | 108 | 108 | 108 | 431 |
| | kg. | 49 | 49 | 49 | 49 | 196 |
| 52052 / 62055 | lb. | 109 | 109 | 109 | 109 | 437 |
| | kg. | 49 | 49 | 50 | 50 | 198 |
| 52055 / 62058 | lb. | 110 | 110 | 110 | 110 | 440 |
| | kg. | 50 | 50 | 50 | 50 | 200 |
| 52074 / 62082 | lb. | 152 | 152 | 153 | 153 | 610 |
| | kg. | 69 | 69 | 69 | 69 | 277 |
| 52078 / 62086 | lb. | 154 | 154 | 154 | 154 | 615 |
| | kg. | 70 | 70 | 70 | 70 | 279 |
| 52080 / 62088 | lb. | 154 | 154 | 154 | 154 | 615 |
| | kg. | 70 | 70 | 70 | 70 | 279 |

**Table 28**

## Weights and Loading Points

| SCRW | UNIT | LOADING POINTS | | | | Total Weight |
|---|---|---|---|---|---|---|
| | | A1 | A2 | A3 | A4 | |
| 51016 / 61016 | lb. | 135 | 164 | 133 | 158 | 590 |
| | kg. | 61 | 74 | 60 | 72 | 268 |
| 51021 / 61021 | lb. | 143 | 174 | 138 | 165 | 618 |
| | kg. | 65 | 79 | 62 | 75 | 280 |
| 51024 / 61024 | lb. | 173 | 209 | 167 | 201 | 750 |
| | kg. | 79 | 95 | 76 | 91 | 340 |
| 51028 / 61028 | lb. | 184 | 226 | 173 | 209 | 793 |
| | kg. | 84 | 102 | 79 | 95 | 359 |
| 51036 / 61036 | lb. | 223 | 275 | 208 | 238 | 944 |
| | kg. | 101 | 125 | 94 | 108 | 428 |
| 51047 / 61047 | lb. | 238 | 298 | 217 | 250 | 1002 |
| | kg. | 108 | 135 | 98 | 113 | 454 |
| 51050 / 61050 | lb. | 327 | 386 | 311 | 366 | 1391 |
| | kg. | 148 | 175 | 141 | 166 | 631 |
| 51058 / 61058 | lb. | 330 | 390 | 314 | 370 | 1404 |
| | kg. | 150 | 177 | 143 | 168 | 637 |
| 51080 / 61080 | lb. | 355 | 427 | 328 | 389 | 1499 |
| | kg. | 161 | 194 | 149 | 176 | 680 |
| 51100 / 61100 | lb. | 370 | 444 | 343 | 404 | 1561 |
| | kg. | 168 | 201 | 156 | 183 | 708 |

Table 29

## Sound Data

### SCRR & RCA (50Hz)

| MODEL | Sound pressure level in dBA ref $2x10^{-5}$ Pa @ 2 meter in free field | | | | | | | | Overall |
|---|---|---|---|---|---|---|---|---|---|
| | Spectrum per Octave band dB(A) ** | | | | | | | | |
| SCRR | 63 | 125 | 250 | 500 | 1k | 2k | 4k | 8k | dBA |
| 51017 | 22 | 32 | 46 | 47 | 49 | 46 | 43 | 36 | 54 |
| 51020 | 25 | 35 | 49 | 50 | 50 | 48 | 46 | 38 | 56 |
| 51024 | 28 | 40 | 54 | 56 | 55 | 52 | 48 | 40 | 61 |
| 51030 | 33 | 49 | 51 | 53 | 53 | 50 | 45 | 36 | 59 |
| 51036 | 32 | 49 | 57 | 57 | 54 | 53 | 48 | 41 | 62 |
| 52036 | 32 | 49 | 57 | 57 | 55 | 52 | 48 | 41 | 62 |
| 51042 | 35 | 52 | 60 | 60 | 57 | 55 | 51 | 43 | 65 |
| 52042 | 35 | 52 | 60 | 60 | 57 | 54 | 50 | 43 | 65 |
| 52048 | 31 | 43 | 58 | 59 | 59 | 55 | 51 | 43 | 64 |
| 52063 | 31 | 48 | 57 | 57 | 54 | 53 | 49 | 40 | 62 |
| 52070 | 34 | 51 | 60 | 59 | 57 | 56 | 51 | 43 | 65 |
| 52075 | 36 | 53 | 62 | 61 | 59 | 57 | 53 | 45 | 67 |

Table 30

** Sound data +/- 2dB(A)

## Weights and Loading Points

| MODEL | Sound pressure level in dBA ref 2x10 $^{-5}$ Pa @ 5 meter in free field | | | | | | | | Overall |
|---|---|---|---|---|---|---|---|---|---|
| | Spectrum per Octave band dB(A) ** | | | | | | | | |
| RCA | 63 | 125 | 250 | 500 | 1k | 2k | 4k | 8k | dBA |
| 51022 | 56 | 47 | 43 | 43 | 46 | 44 | 39 | 31 | 58 |
| 51026 | 56 | 47 | 43 | 43 | 46 | 44 | 39 | 31 | 58 |
| 51028 | 56 | 47 | 43 | 43 | 46 | 44 | 39 | 31 | 58 |
| 51037 | 59 | 49 | 46 | 46 | 49 | 47 | 42 | 34 | 61 |
| 51046 | 59 | 49 | 46 | 46 | 49 | 47 | 42 | 34 | 61 |
| 52046 | 59 | 49 | 46 | 46 | 49 | 47 | 42 | 34 | 61 |
| 51052 | 59 | 49 | 46 | 46 | 49 | 46 | 42 | 33 | 60 |
| 52052 | 59 | 49 | 46 | 46 | 49 | 46 | 42 | 33 | 60 |
| 52055 | 59 | 49 | 46 | 46 | 49 | 46 | 42 | 33 | 60 |
| 52074 | 61 | 51 | 47 | 47 | 51 | 48 | 43 | 35 | 62 |
| 52078 | 61 | 51 | 47 | 47 | 51 | 48 | 43 | 35 | 62 |
| 52080 | 61 | 51 | 47 | 47 | 51 | 48 | 43 | 35 | 62 |

Table 31

** Sound data +/- 2dB(A)

## Sound Data

### SCRR & RCA (60Hz)

| MODEL | Sound pressure level in dBA ref 2x10 $^{-5}$ Pa @ 2 meter in free field | | | | | | | | Overall |
|---|---|---|---|---|---|---|---|---|---|
| | Spectrum per Octave band dB(A) ** | | | | | | | | |
| SCRR | 63 | 125 | 250 | 500 | 1k | 2k | 4k | 8k | dBA |
| 61018 | 22 | 32 | 46 | 51 | 49 | 48 | 46 | 38 | 55 |
| 61020 | 25 | 35 | 49 | 52 | 50 | 49 | 47 | 39 | 57 |
| 61025 | 28 | 40 | 54 | 56 | 55 | 52 | 49 | 41 | 61 |
| 61030 | 33 | 49 | 51 | 54 | 53 | 52 | 47 | 38 | 59 |
| 61037 | 32 | 49 | 57 | 57 | 55 | 55 | 51 | 41 | 63 |
| 62037 | 32 | 49 | 57 | 58 | 55 | 53 | 50 | 42 | 63 |
| 61042 | 35 | 52 | 60 | 60 | 58 | 58 | 51 | 44 | 65 |
| 62042 | 35 | 52 | 60 | 60 | 57 | 55 | 51 | 43 | 65 |
| 62052 | 31 | 43 | 58 | 60 | 59 | 55 | 52 | 44 | 65 |
| 62064 | 31 | 48 | 57 | 57 | 55 | 55 | 50 | 42 | 63 |
| 62073 | 34 | 51 | 60 | 60 | 58 | 57 | 53 | 44 | 65 |
| 62080 | 36 | 53 | 62 | 61 | 59 | 60 | 53 | 46 | 67 |

Table 32

** Sound data +/- 2dB(A)

## Sound Data

### SCRR & RCA (60Hz)

| MODEL RCA | Sound pressure level in dBA ref 2x10 $^{-5}$ Pa @ 5 meter in free field | | | | | | | | Overall |
|---|---|---|---|---|---|---|---|---|---|
| | Spectrum per Octave band dB(A) ** | | | | | | | | |
| | 63 | 125 | 250 | 500 | 1k | 2k | 4k | 8k | dBA |
| 61023 | 58 | 49 | 43 | 44 | 45 | 44 | 43 | 34 | 59 |
| 61028 | 58 | 49 | 43 | 44 | 45 | 44 | 43 | 34 | 59 |
| 61030 | 58 | 49 | 43 | 44 | 45 | 44 | 43 | 34 | 59 |
| 61040 | 60 | 52 | 45 | 47 | 48 | 47 | 46 | 37 | 62 |
| 61050 | 60 | 52 | 45 | 47 | 48 | 47 | 46 | 37 | 62 |
| 62050 | 60 | 52 | 45 | 47 | 48 | 47 | 46 | 37 | 62 |
| 61055 | 60 | 52 | 45 | 47 | 48 | 47 | 46 | 37 | 62 |
| 62055 | 60 | 52 | 45 | 47 | 48 | 47 | 46 | 37 | 62 |
| 62058 | 60 | 52 | 45 | 47 | 48 | 47 | 46 | 37 | 62 |
| 62082 | 62 | 53 | 47 | 48 | 50 | 49 | 47 | 39 | 63 |
| 62086 | 62 | 53 | 47 | 48 | 50 | 49 | 47 | 39 | 63 |
| 62088 | 62 | 53 | 47 | 48 | 50 | 49 | 47 | 39 | 63 |

**Table 33**

** Sound data +/- 2dB(A)

## Sound Data

### SCRW (50 & 60Hz)

| MODEL | Sound pressure level in dBA ref 2x10$^{-5}$ Pa @ 2 meter in free field | | | | | | | | Overall |
|---|---|---|---|---|---|---|---|---|---|
| | Spectrum per Octave band dB(A) ** | | | | | | | | |
| | 63 | 125 | 250 | 500 | 1k | 2k | 4k | 8k | dBA |
| 51016 / 61016 | 22 | 32 | 46 | 47 | 45 | 43 | 40 | 31 | 52 |
| 51021 / 61021 | 25 | 35 | 49 | 50 | 48 | 46 | 43 | 34 | 55 |
| 51024 / 61024 | 28 | 40 | 54 | 56 | 55 | 51 | 47 | 39 | 61 |
| 51028 / 61028 | 28 | 40 | 54 | 56 | 55 | 51 | 47 | 39 | 61 |
| 51036 / 61036 | 32 | 49 | 57 | 56 | 54 | 51 | 46 | 38 | 62 |
| 51047 / 61047 | 33 | 50 | 58 | 57 | 55 | 52 | 47 | 39 | 63 |
| 51050 / 61050 | 31 | 43 | 58 | 59 | 58 | 55 | 50 | 42 | 64 |
| 51058 / 61058 | 31 | 48 | 57 | 56 | 53 | 51 | 45 | 37 | 61 |
| 51080 / 61080 | 34 | 51 | 60 | 59 | 56 | 54 | 48 | 40 | 64 |
| 51100 / 61100 | 36 | 52 | 54 | 56 | 55 | 50 | 43 | 34 | 61 |

**Table 34**

** Sound data +/- 2dB(A)

## Unit Configuration

### Up Flow - Down Return

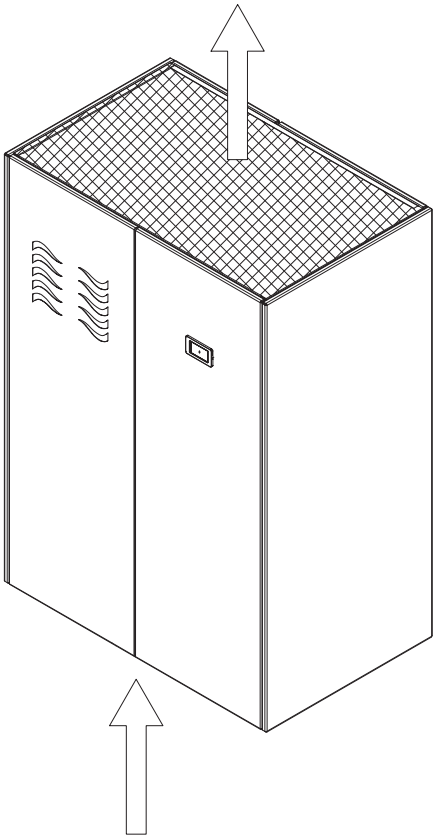

### Down Flow

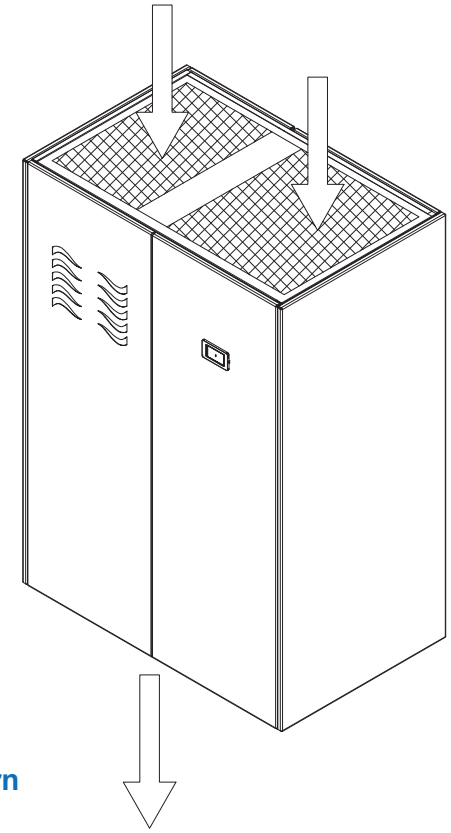

### Up Flow - Front Return

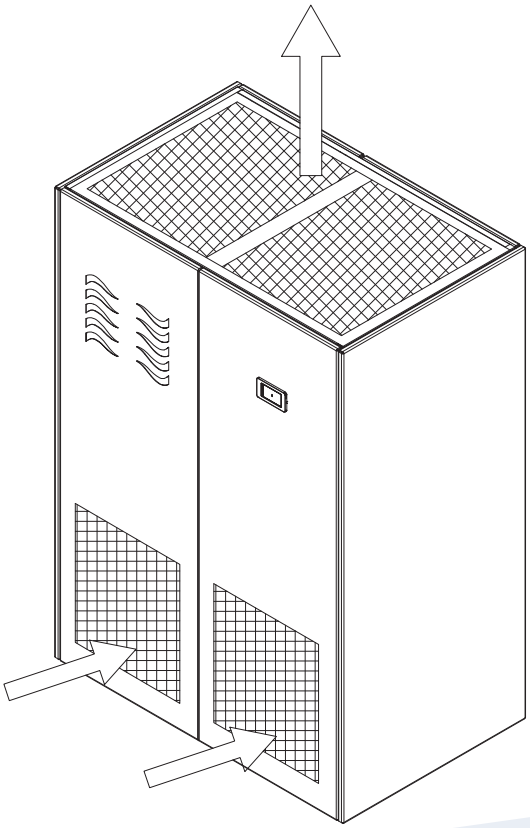

# Recommended Clearances

## Indoor Unit

Indoor unit minimum required clearance space is as shown following figure.

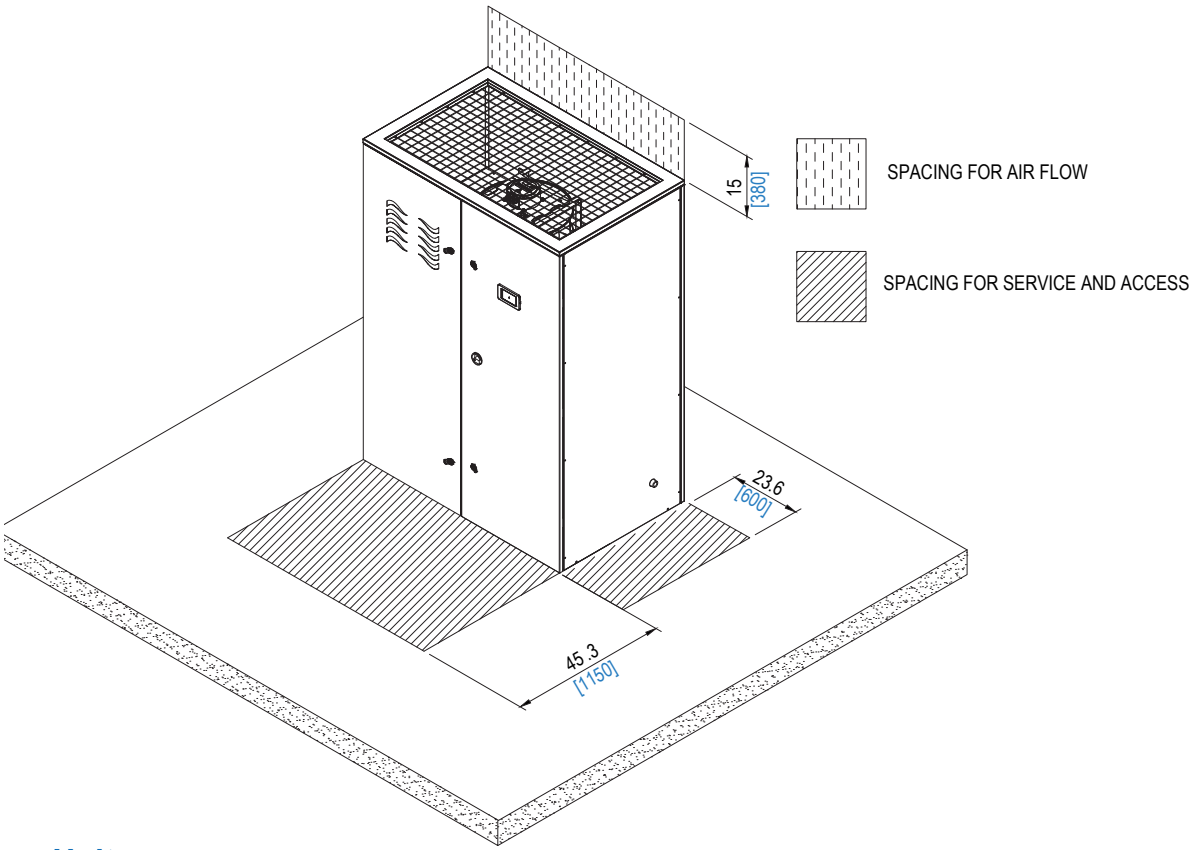


## Outdoor Unit

Outdoor unit minimum required clearance space is as shown following figure.

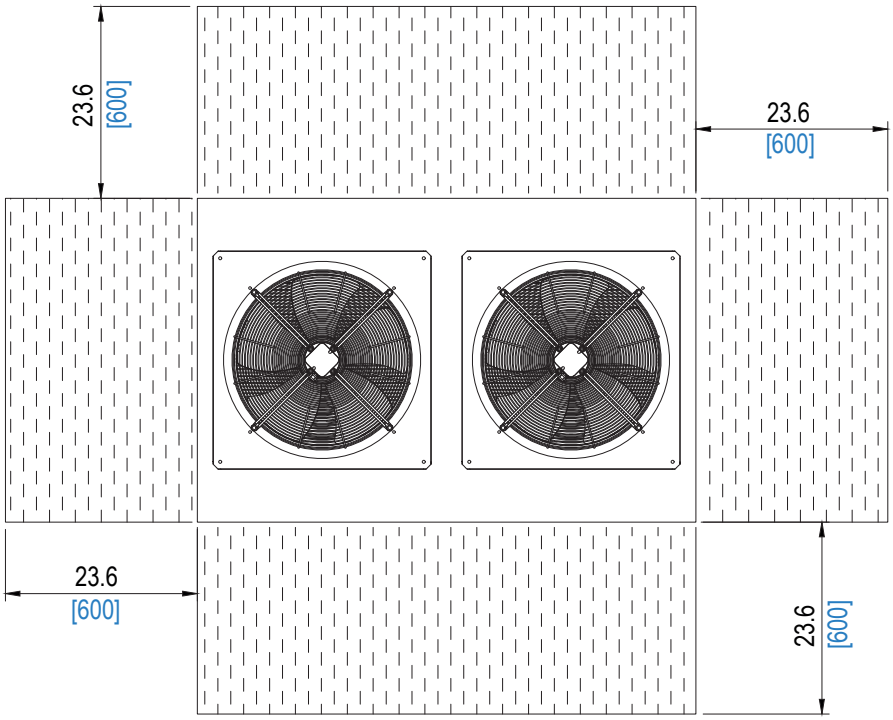


All Dimensions are in Inches [MM]

# Location and Space Requirements

- Install the unit in such a location which is flat and strong enough to support its weight.
- All field wiring must comply with applicable local and national codes.
- Service spacing should be provided as shown in the figure. If any obstacles are around the unit, distributed air is short-circuited so that the unit stops frequently and access to the unit is difficult for inspection and aftersales services.

## Indoor Unit

It shall be ensured that there is enough space around the installation position of the unit for operation and maintenance. At the same time, it shall be ensured that the air flow is smooth, unobstructed and there is no short circuit. Indoor unit minimum requierd installation space is a shown in the following figure.

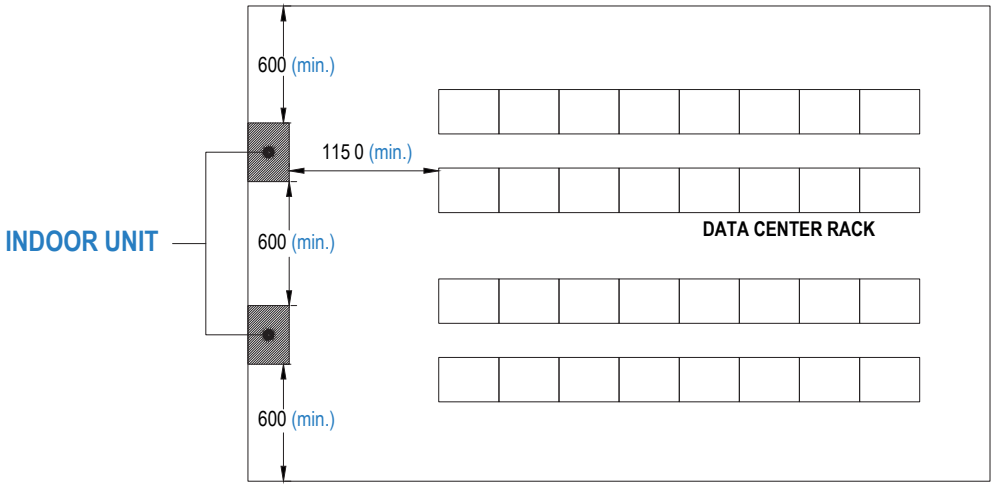


All Dimensions are in MM

## Outdoor Unit

Air-cooled outdoor units minimum installation space is as shown in the following figure.

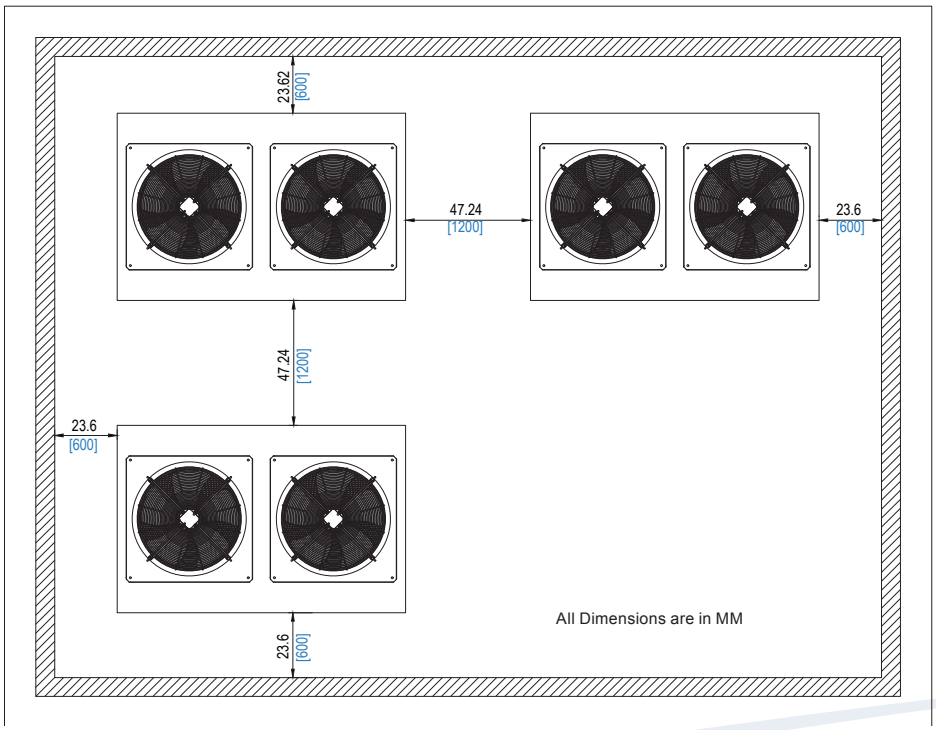


Note: Above shown installation space are applicable for entire series.

## Unit Handling

During the handling of the unit, the balance of the machine body shall be maintained. And the left-right tilt angle of the air conditioner shall not exceed ±15° during loading and unloading. As shown in the figure below.

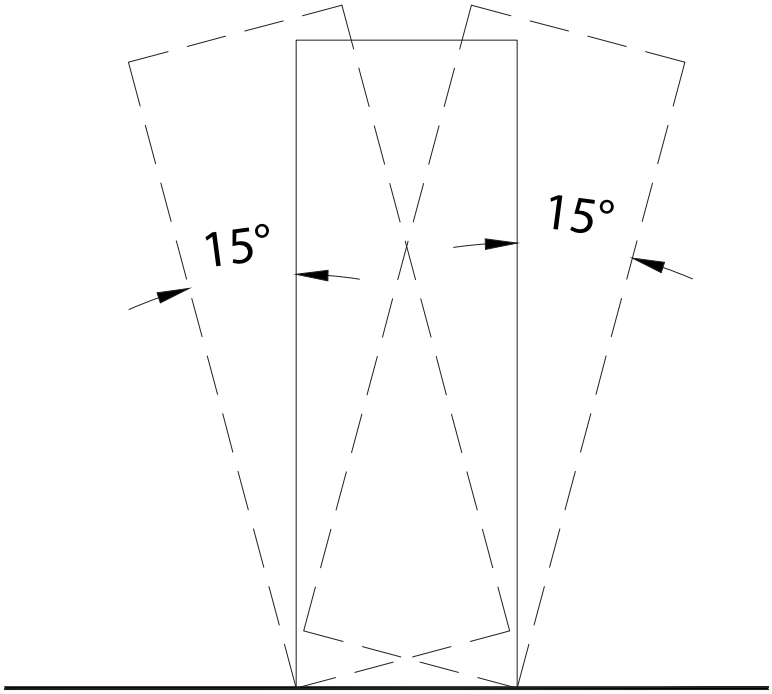


Mechanical handling tools such as forklift shall be selected as much as possible in the process of unloading and handling. The product shall be forked in the middle position to ensure symmetry. Special care shall be taken to prevent dumping during transportation.

# GUIDE SPECIFICATIONS

## GENERAL

Computer Room Air Conditioner (**CRAC**) can be supplied with Chilled Water or Direct Expansion types. Direct Expansion type CRAC shall have two separate units; indoor unit (**SCRR**) and outdoor unit (**RCA**) connected thru refrigerant piping . **SCRR** shall be composed of compressor(s), evaporator coil , plug fan(s), humidifier , electric heater , electrical components & enclosing cabinet in one piece. **RCA** shall be composed of condenser coil and condenser fan(s) and speed regulator. Chilled Water type **CRAC** shall have one unit (**SCRW**), **SCRW** shall be composed of cooling coil, plug fan(s), humidifier, electric heater, water valkve(s), electrical components & enclosing in one piece. These units shall be factory assembled, internally wired, and tested under strict quality standards.

## REMOTE CONDENSING UNIT

## CONDENSER COIL(S)

Condenser coils shall be air cooled with integral sub cooler, constructed of special inner grooved seamless copper tubes 3/8" OD mechanically expanded into corrugated aluminum fins. These coils shall be tested against leakage by high pressure under water, cleaned & dehydrated at the factory.

## CONDENSER FAN(S)

Condenser fans are propeller type with aluminum alloy blades and are directly driven by electric motors. Motors are Totally Enclosed Air Over (TEAO), six pole with Class F insulation and IP54 protection . The TEAO and Class F insulation features ensure long life. Condenser fan shall be provided with speed regulation to ensure smooth operation of the unit at low ambient condition.

## CONDENSER FAN SPEED REGULATION

Speed regulation of condenser fan shall be done by using Electronic voltage controller which will vary the fan speed based on discharge pressure reading.

## COMPUTER ROOM AIR CONDITIONER

## COMPRESSOR(S)

Compressor shall be hermetically sealed, compact high efficiency and low noise scroll type. These compressors are refrigerant gas cooled, furnished with advanced scroll temperature protection or internal motor protection.

## EVAPORATOR COIL

Evaporator coil shall be constructed of inner grooved copper tubes 3/8" OD mechanically bonded to aluminum corrugated fins. Coil consists of headers of seamless copper tubing, electronic expansion valve(s) & multi-circuited distributor(s). These coils shall be tested against leakage by 450 psig high pressure under water, cleaned & dehydrated at the factory. Coil shall conform to AHRI-410.

## EVAPORATOR FAN & DRIVE

Fans of evaporator shall be high efficient direct driven plug , centrifugal type ,driven by EC motor.

## FILTER SECTION

**SCRR** & **SCRW** units shall be provided with 2" thick pleated filter with grade G4 as standard for all models . Filter shall be mounted on the evaporator coil for reduced airside pressure drop

## CASING & STRUCTURE

**CRAC** unit casing shall be made of zinc coated galvanized steel sheets conforming to JIS-G3302 and ASTM A653 which is phosphatized and baked after an electrostatic powder coat of approximately 60 microns. This finish and coating can pass a 1000 hour in 5% salt spray testing at 95°F (35°C) and 95% relative humidity as per ASTM B117.
**SCRR & SCRW** Panels and casing are insulated with 1" (25mm) thick fiberglass (with BGT coating) thermal and acoustic insulation having density of 2 lb/ft3. (32 kg/m3) and thermal conductivity of 0.23 BTU.in/ft2°Fh (0.033 W/m°K). Insulation meets the requirements of NFPA 90A and 90B for fire resistance.

## COOLING COIL (CHILLED WATER)

Cooling coil shall be constructed of plain copper tubes 3/8" OD mechanically bonded to aluminum corrugated fins. Coil consists of headers of seamless copper tubing, water connection (can be solder connection , MPT or flange) and water regulating valve. These coils shall be tested against leakage by 450 psig high pressure under water, cleaned & dehydrated at the factory. Coil shall conform to AHRI-410.

## STEAM HUMIDIFIER

Humidifier shall be steam type with immersed electrode, it shall be provided with cleanable cylinder, fill and drain valves,stainless steel distributor and electronic control.

## LIQUID RECEIVER

Liquid receiver shall be provided in the liquid line of **SCRR** with rotolock valves on both inlet and outlet.

## EXPANSION VALVE

**SCRR** Expansion valve shall be electronic type for precise control.

# GUIDE SPECIFICATIONS

## ELECTRIC HEATER

Electric Heater shall be made up of finned heating elements, constructed from high quality 80/20 nickel chrome resistance wire centred in metal tube by compressed magnesium oxide. Helical fins are tightly wound around the tubular heating element.

## WATER VALVE

**SCRW** shall be supplied with two-way motorized valve to regulate the water flow. Three-way & PICV available as an option.

## CONTROL PANEL

Control panel shall be fabricated out of heavy gauge sheet steel in phosphatized powder coated baked finish. Access shall be hinged and with lockable handle , and shall be provided for the unit and the control panel. The panel shall be factory wired in accordance with NEC 430 & 440, labelled, tagged and features 220-230V controls.
Below are the standard components which shall be provided in any **SCRR** control panel. (Except compressor, condenser fan and expansions all other features applicable for **SCRW**)

- Isolator on the main incomer.
- Individual contactors for compressors, condenser fan motors, electric heater and humidifier.
- Individual circuit breakers for compressors, condenser fan motors, supply fan motor and electric heater.
- Thyristor for electric heater.
- Microprocessor-based main control board.
- Unit door mounted touch screen graphical display.
- Electronic expansion valve driver, with stand-alone DC power supply.
- Humidifier controller.
- Flood detection module, connected with spot flood sensors at the floor of the room.
- Voltage monitoring module for protection against under voltage, over voltage, phase loss, phase reversal and phase unbalance of the incoming voltage.
- Unit on/off switch.
- Control Relays and control circuit breaker.
- Power and Control terminal blocks.
- All compressors are with DOL start, as standard.

## NOTES

# Contact us

## SKM Offices




*P.O Box: 6004, Sharjah, United Arab Emirates*
*Tel: +971 6 514 3333 | Fax: +971 6 514 3300*
*Email: sales@skmaircon.com | info@skmaircon.com*
*Spare Parts Division: spareparts.skm@skmaircon.com*
*Service Center: aftersales@skmaircon.com*
*Toll Free: 800 MYSKM (69756) (UAE only)*




*Al Khobar: Tel.: +966 13 8820152 | Fax: +966 13 8820153*
*Al-Riyadh: Tel.: +966 11 2914775 | Fax: +966 11 2914771*
*Jeddah: Tel.: +966 12 6639357 | Fax: +966 12 6639357*
*P.O Box: 7334, Al Khobar 34432 - 5423 - KSA*
*Customer Call Center: 920022595*
*ksasales.skm@skmaircon.com*




*P.O Box: 1215, Dasman, Kuwait Office, Murgab, Kuwait*
*Tel : +965 22 492 200 | Fax: +965 22 494 400*
*Email: kuwaitsales.skm@skmaircon.com*

For SKM Regional Offices & Distributors
visit: www.skmaircon.com

212/2021A
Supercedes Bulletin # 212/2021